Installation, use and maintenance instructions
安装，使用和维护说明书

RIELLO

GB

Forced draught gas burners

CN

强制通风燃气燃烧器

One-stage operation
一段火运行

RS

CODE - 编码	MODEL - 型号	TYPE - 类型
20033785	RS 34/1 MZ	886 T
20033725	RS 44/1 MZ	873 T

20033803 (2) - 08/2011

IDENTIFICATION

The Identification Plate on the product gives the serial number, model and main technical and performance data. If the Identification Plate is tampered with, removed or missing, the product cannot be clearly identified, thus making any installation or maintenance work potentially dangerous.

GENERAL WARNINGS

The dimension of the boiler's combustion chamber must respond to specific values, in order to guarantee a combustion with the lowest polluting emissions rate.
You are therefore advised to consult the Technical Assistance Department before choosing this type of burner for the combination with a boiler.
Qualified personnel are those with the professional and technical requirements indicated by Law no. 46 dated 5 March 1990. The commercial organisation has a widespread network of agencies and technical offices whose personnel participates periodically in instructional and refresher courses at the company training centre.
This burner must only be used for the application it was designed for.
The manufacturer cannot accept responsibility for any damage to persons, animals or property due to errors in installation or in the burner adjustment, or due to improper or unreasonable use or non-observance of the technical instructions enclosed with the burner, or due to the intervention of unqualified personnel.

USER INFORMATION

If faults arise in firing or operation, the burner performs a "safety stop", which is signalled by the red burner lockout LED. To rearm start-up conditions, press the reset button. When the burner starts up again, the red LED goes out.
This operation can be repeated for a maximum of 3 times. If the "safety stop" recurs, then the Technical Assistance Centre must be contacted.

BASIC SAFETY MEASURES

- ➤ Children or inexpert persons must not use the appliance.
- ➤ Under no circumstances must the intake grids, dissipation grids and ventilation vents in the installation room be covered up with cloths, paper or any other material.
- ➤ Unauthorised persons must not attempt to repair the appliance
- ➤ It is dangerous to pull or twist the electric leads.
- ➤ Cleaning operations must not be performed if the appliance is not disconnected from the main power supply.
- ➤ Do not clean the burner or its parts with inflammable substances (e.g. petrol, alcohol, etc.).
  The cover must be cleaned with soapy water.
- ➤ Do not place anything on the burner.
- ➤ Do not leave containers and inflammable products in the installation room.

The following symbols are used in this manual:

⚠ **ATTENTION =** for actions requiring special care and adequate preparation.

⛔ **FORBIDDEN =** for actions **THAT MUST NOT** be performed.

GB INDEX

N.B.
Figures mentioned in the text are identified as follows:
1)(A) = Part. 1 of figure A, same page as text;
1)(A)p.3 = Part .1 of figure A, page number 3.

INFORMATION ABOUT THE INSTRUCTION MANUAL

INTRODUCTION

The instruction manual supplied with the burner:
- is an integral and essential part of the product and must not be separated from it; it must therefore be kept carefully for any necessary consultation and must accompany the burner even if it is transferred to another owner or user, or to another system. If the manual is lost or damaged, another copy must be requested from the Technical Assistance Service RIELLO of the area;
- is designed for use by qualified personnel;
- offers important indications and instructions relating to the installation safety, start-up, use and maintenance of the burner.

DELIVERY OF THE SYSTEM AND THE INSTRUCTION MANUAL

When the system is delivered, it is important that:
- The instruction manual is supplied to the user by the system manufacturer, with the recommendation to keep it in the room where the heat generator is to be installed.
- The instruction manual shows:
  - the serial number of the burner;

    .....

  - the address and telephone number of the nearest Assistance Centre;

    .....
    .....
    .....

- The system supplier carefully informs the user about:
  - the use of the system,
  - any further tests that may be necessary before the system is started up,
  - maintenance and the need to have the system checked at least once a year by the manufacturer or another specialised technician.

    To ensure a periodic check, RIELLO recommends the drawing up of a Maintenance Contract.

TECHNICAL DATA

MODEL		RS 34/1 MZ		RS 44/1 MZ	
TYPE		886 T		873 T	
OUTPUT (1)	kW Mcal/h	70 - 390 60 - 336		100 - 550 86 - 473	
FUEL		NATURAL GAS: G20 - G21 - G22 - G23 - G25			
		G20	G25	G20	G25
- net calorific value	kWh/Sm^3 Mcal/Sm^3	9.45 8.2	8.13 7.0	9.45 8.2	8.13 7.0
- absolute density	kg/Sm^3	0.71	0.78	0.71	0.78
- max. delivery	Sm^3/h	35	40	49	57
- pressure at maximum delivery (2)	mbar	13,1	18,4	16,7	23,2
OPERATION		• On-Off (1 stop min each 24 hours). • One stage (all - nothing)			
STANDARD APPLICATIONS		Boilers: water, steam, diathermic oil			
AMBIENT TEMPERATURE	°C	0 - 40			
COMBUSTION AIR TEMPERATURE	°C max	60			
ELECTRICAL SUPPLY	V Hz	230 ~ +/-10% 50/60 - single-phase			
ELECTRIC MOTOR	rpm W V A	2800/3400 300 220 - 240 2.4		2820/3400 420 220 - 240 3	
ACCELERATION CURRENT	A	15		17	
WORKING CURRENT	A	3.2		3.5	
MOTOR CAPACITOR	µF/V	12.5/400		12.5/450	
IGNITION TRANSFORMER	V1 - V2 I1 - I2	230 V - 1 x 15kV 1 A - 25mA			
ELECTRICAL OUTPUT CONSUMPTION	W max	600		700	
PROTECTION LEVEL		IP 40			
IN CONFORMITY WITH EEC DIRECTIVES		90/396 - 2004/108 - 2006/95 - 2006/42			
NOISE (3) SOUND PRESSURE SOUND POWER	dBA	68 79		70 81	
APPROVAL	CE	0085BR0380		0085BR0380	

(1) Reference conditions: Ambient temperature 20°C - Gas temperature 15°C - Barometric pressure 1013 mbar - Altitude 0 m a.s.l.
(2) Pressure at the socket 8)(A)p.4 with zero pressure in the combustion chamber, at the maximum output of the burner.
(3) Noise emission tests carried out as specified in EN 15036-1 with measurement accuracy σ = ± 1.5 dB, in the manufacturer's combustion chamber with burner operating on test boiler at maximum output.

STRUCTURAL VERSIONS

Model	Blast tube length mm
RS 34/1 MZ	216 351
RS 44/1 MZ	216 351

GAS CATEGORIES

COUNTRY	CATEGORY
IT - AT - GR - DK - FI - SE	$II_{2H3B/P}$
ES - GB - IE - PT	II_{2H3P}
NL	$II_{2L3B/P}$
FR	II_{2Er3P}
DE	$II_{2ELL3B/P}$
BE	$I_{2E(R)B}$, I_{3P}
LU	$II_{2E\ 3B/P}$

ACCESSORIES (optional):

• RADIO DISTURBANCE PROTECTION KIT

If the burner is installed in places particularly subject to radio disturbance (emission of signals exceeding 10 V/m) owing to the presence of an INVERTER, or in applications where the length of the thermostat connections exceeds 20 metres, a protection kit is available as an interface between the control box and the burner.

BURNER	RS 34/1 MZ - RS 44/1 MZ
Code	3010386

• KIT LONG HEAD

BURNER	RS 34/1 MZ	RS 44/1 MZ
Code	3010428	3010429

• KIT FOR LPG OPERATION: the kit allows the RS 34-44/1 MZ burners to burn LPG.

BURNER	RS 34/1 MZ	RS 44/1 MZ
Output kW	80 - 390 kW	120 - 530 kW
Blast tube length mm	216 - 351	216 - 351
Code	3010423	3010424

• KIT MAXIMUM GAS PRESSURE SWITCH	Cod. 3010418
• KIT CLEAN CONTACTS	Cod. 3010419
• KIT POST-PURGING	Cod. 3010452
• KIT GROUND FAULT INTERRUPTER	Cod. 3010448
• KIT CONTINUOUS PURGING	Cod. 3010449
• KIT HOURCOUNTER	Cod. 3010450
• KIT INTERFACE ADAPTER RMG TO PC	Cod. 3002719

• GAS TRAIN ACCORDING TO EN 676 (with valves, pressure governor and filter): see page 10.

NOTE: The installer is responsible for the addition of any safety device not foreseen in this manual.

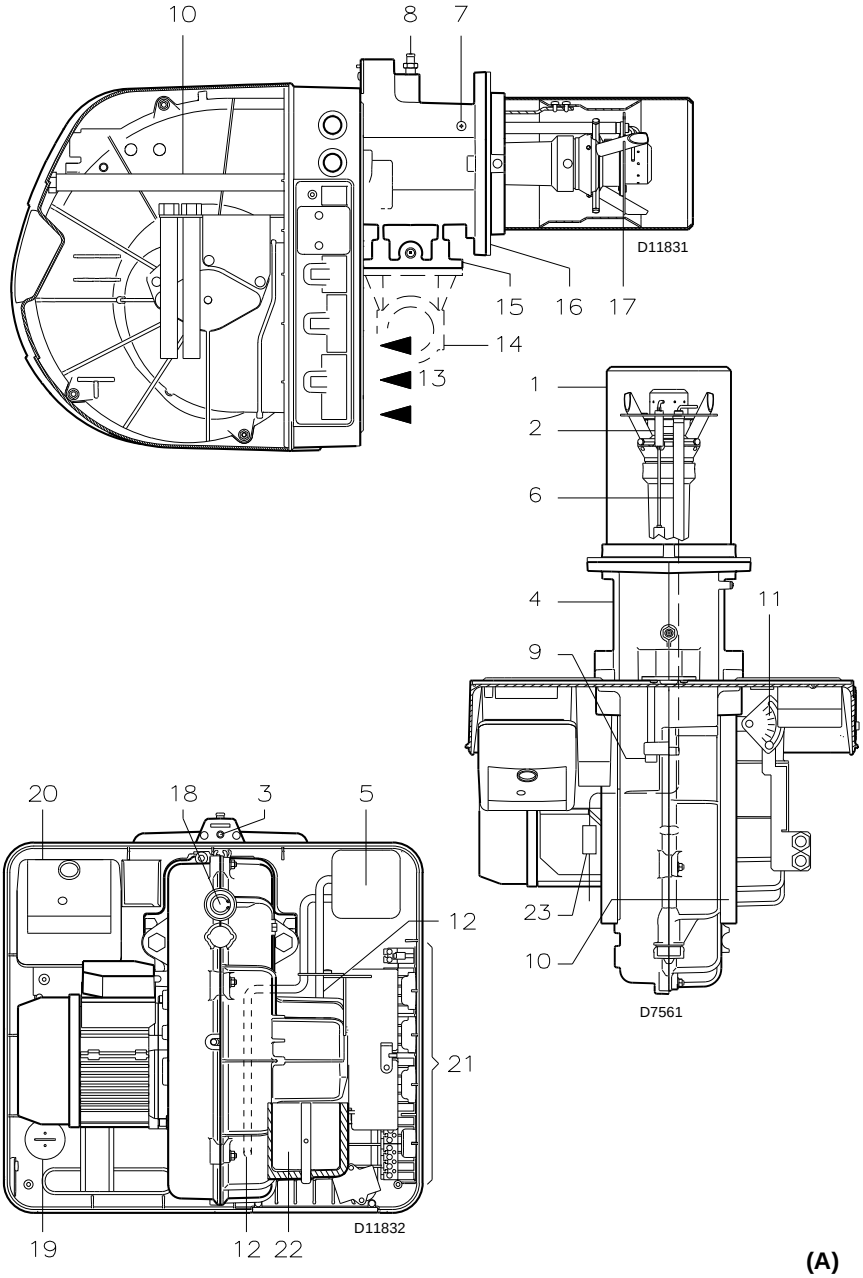

(A)

mm	A	B	C	kg
RS 34/1 MZ	1000	500	485	-
RS 44/1 MZ	1000	500	485	-

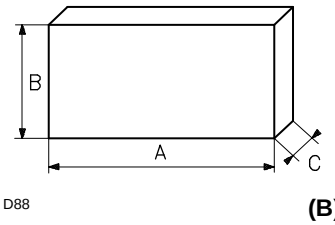

(B)

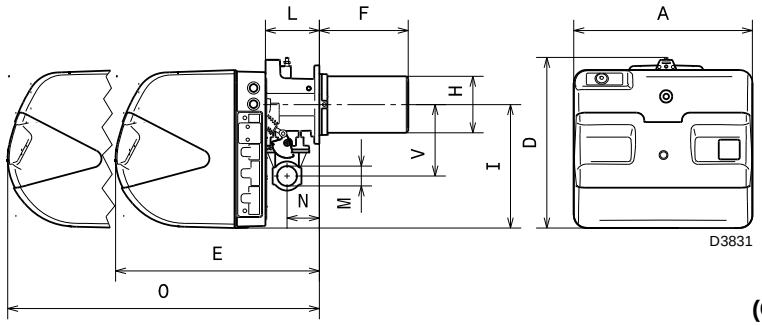

(C)

mm	A	D	E	F (1)	H	I	L	O	N	V	M
RS 34/1 MZ	442	422	508	216-351	140	305	138	780	84	177	1”1/2
RS 44/1 MZ	442	422	508	216-351	152	305	138	780	84	177	1”1/2

(1) Blast tube: short-long

BURNER DESCRIPTION (A)

1 Combustion head
2 Ignition electrode
3 Screw for combustion head adjustment
4 Sleeve
5 Minimum air pressure switch (differential operating type)
6 Flame sensor probe
7 Air pressure test point
8 Gas pressure test point and head fixing screw
9 Screw securing fan to pipe coupling
10 Slide bars for opening the burner and inspecting the combustion head
11 Indexed selector. Opens the fan gate to the value needed by the burner delivery.
12 Pressure test point of
13 Air inlet to fan
14 Gas input pipework
15 Gas train connection flange
16 Boiler fixing flange
17 Flame stability disc
18 Flame inspection window
19 Motor capacitor (RS 34/1 MZ)
20 Control box with lockout pilot light and lock-out reset button
21 Plugs for electrical wiring
22 Air damper
23 Plug-socket on ionisation probe cable

Note
If the control box 20)(A) pushbutton (**red led**) lights up, it indicates that the burner is in lock-out.
To reset, hold the pushbutton down for between 1 and 3 seconds.

PACKAGING - WEIGHT (B) - approximate measurements

- The burner are shipped in cardboard boxes with the maximum dimensions shown in Table (B).
- The weight of the burner complete with packaging is indicated in Table (B).

MAX. DIMENSIONS (C) - approximate measurements
The maximum dimensions of the burner are given in fig. (C).
Note that if you need to examine the combustion head, the burner must be pulled backward on the slide bars.
The maximum dimension of the burner, without the cover, when open is given by measurement H.

BURNER EQUIPMENT

1 - Gas train flange
1 - Flange gasket
4 - Flange fixing screws M 8 x 25
4 - Screws to secure the burner flange to the boiler: M 8 x 25
1 - Thermal insulation screen
3 - Plugs for electrical connection
1 - Instruction
1 - Spare parts list

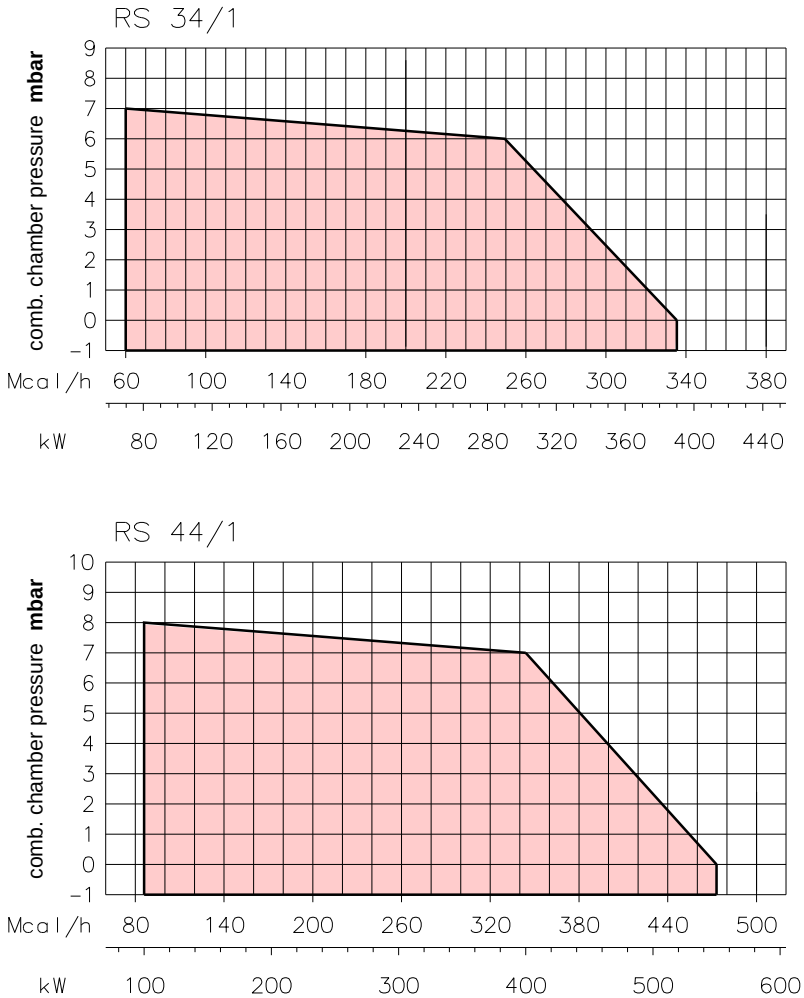

(A) D8589

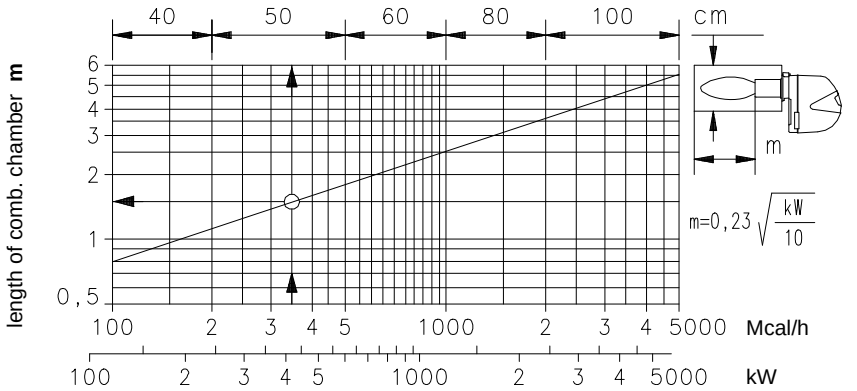

(B) D497

FIRING RATES (A)

The burner output must be selected within the area of the adjacent diagrams.

Attention

the FIRING RATE value range has been obtained considering an ambient temperature of 20 °C, and an atmospheric pressure of 1013 mbar (approx. 0 m a.s.l.) and with the combustion head adjusted as shown on page 9.

TEST BOILER (B)

The firing rates were set in relation to special test boilers, according to EN 676 regulations.
Figure (B) indicates the diameter and length of the test combustion chamber.

Example: Output 350 Mcal/h:
diameter = 50 cm - length 1.5 m.

COMMERCIAL BOILERS

The burner/boiler combination does not pose any problems if the boiler is CE approved and its combustion chamber dimensions are similar to those indicated in diagram (B).
If the burner must be combined with a commercial boiler that has not been CE type-approved and/or its combustion chamber dimensions are clearly smaller than those indicated in diagram (B), consult the manufacturer.

RS 34/1 MZ One-stage gas train Δp (mbar)

kW	1	2					
		MBC-DLE-120 (Rp 3/4")	MB 407 S2 (Rp 3/4")	MB 410 S2 (Rp 1.1/4")	MB 412 S2 (Rp 1.1/4")	MB 415 S2 (Rp 1.1/2")	MB 420 S2 (Rp 2")
70	0,6	5,2	3,0	--	--	--	--
75	0,6	5,6	3,4	2,1	--	--	--
100	1,0	8,2	5,6	2,9	--	--	--
125	1,4	11,1	8,0	4,2	2,1	--	--
150	2,4	15,7	11,0	5,6	2,8	--	--
175	3,5	21,1	14,4	7,2	3,6	--	--
200	4,6	27,2	18,1	9,0	4,5	--	--
225	5,8	33,9	22,1	11,0	5,5	3,2	--
250	6,9	41,3	26,4	13,2	6,5	3,3	--
275	8,0	49,4	31,3	15,5	7,6	3,8	--
300	9,1	58,0	36,6	18,0	8,7	4,3	--
325	10,2	67,2	42,2	20,5	9,9	4,8	3,2
350	11,3	76,7	47,8	22,9	11,2	5,4	3,4
375	12,4	86,7	53,7	25,4	12,7	5,9	3,8
390	13,1		57,4	27,0	13,5	6,3	4,0

RS 44/1 MZ One-stage gas train Δp (mbar)

kW	1	2				
		MB 407 S5 (Rp 3/4")	MB 410 S5 (Rp 1.1/4")	MB 412 S2 (Rp 1.1/4")	MB 415 S2 (Rp 1.1/2")	MB 420 S2 (Rp 2")
100	0,2	5,6	2,9	2,1	3,2	3,2
150	1,6	11,0	5,6	2,8	3,2	3,2
200	3,0	18,1	9,0	4,5	3,2	3,2
250	4,9	26,4	13,2	6,5	3,3	3,2
300	6,9	36,6	18,0	8,7	4,3	3,2
350	8,9	47,8	22,9	11,2	5,4	3,4
400	10,8	59,9	28,1	14,0	6,5	4,1
450	12,8	73,2	33,6	16,8	7,7	4,9
500	14,7	87,6	39,5	19,8	9,0	5,7
550	16,7	103,0	45,8	23,1	10,2	6,6

RS 34/1 MZ Two-stage gas train Δp (mbar)

kW	1	2				
		MB-ZR 407 S2 (Rp 3/4")	MB-ZR 410 S2 (Rp 1")	MB-ZR 412 S2 (Rp 1.1/4")	MB-ZR 415 S2 (Rp 1.1/2")	MB-ZR 420 S2 (Rp 2")
70	0,6	3,0	2,1	2,1	--	--
75	0,6	3,4	2,1	2,1	--	--
100	1,0	5,6	2,9	2,1	--	--
125	1,4	8,0	4,2	2,1	--	--
150	2,4	11,0	5,6	2,8	--	--
175	3,5	14,4	7,2	3,6	--	--
200	4,6	18,1	9,0	4,5	--	--
225	5,8	22,1	11,0	5,5	3,2	--
250	6,9	26,4	13,2	6,5	3,3	--
275	8,0	31,3	15,5	7,6	3,8	--
300	9,1	36,6	18,0	8,7	4,3	--
325	10,2	42,2	20,5	9,9	4,8	3,2
350	11,3	47,8	22,9	11,2	5,4	3,4
375	12,4	53,7	25,4	12,7	5,9	3,8
390	13,1	57,4	27,0	13,5	6,3	4,0

(A)

GAS PRESSURE

The adjacent tables show minimum pressure losses along the gas supply line depending on the burner output.

Column 1
Pressure loss at combustion head.
Pressure of the gas at the socket 1)(B)p.7, with combustion chamber at 0 mbar.

Column 2
Pressure loss of gas train 2)(B)p.7 includes: one stage or two stage adjustment valve VR, safety valve VS (both fully open), pressure governor R, filter F.

The values shown in the various tables refer to:
natural gas G 20 PCI 9.45 kWh/Sm^3
(8.2 Mcal/Sm^3)
With:
natural gas G 25 PCI 8.13 kWh/Sm^3
(7.0 Mcal/Sm^3)
multiply the values of the table:
- column 1: by 1.5;
- column 2: by 1.35.

Calculate the approximate maximum output of the burner in this way:
- subtract the combustion chamber pressure from the gas pressure measured at test point 1)(B)p.7.
- Find, in the table relating to the burner concerned, the pressure value closest to the result of the subtraction.
- Read the corresponding output on the left.

Example - RS 34/1/M MZ:
- Maximum output operation
- Natural gas G 20 PCI 9.45 kWh/Sm^3
- Gas pressure at test point 1)(B)p.7 =8.9 mbar
- Pressure in combustion chamber = 2 mbar

8.9 - 2 =6.9 mbar

An output of 250 kW shown in table RS 34/1 corresponds to 6.9 mbar pressure, column 1.
This value serves as a rough guide; the effective delivery must be measured at the gas meter.

To calculate the required gas pressure at test point 1)(B)p.7, set the output required from the burner:
- Find the nearest output value in the table for the burner in question.
- Read, on the right (column 1) the socket pressure 1)(B)p.7.
- Add this value to the estimated pressure in the combustion chamber.

Example - RS 34/1 MZ:
- Required burner output: 250 kW
- Natural gas G 20 PCI 9.45 kWh/Sm^3
- Pressure of the gas at an output of 250 kW, from the table RS 34/1 MZ, column 1 =6.9 mbar
- Pressure in combustion chamber = 2 mbar

6.9 + 2 =8.9 mbar
pressure required at test point 1)(B)p.7.

RS 44/1 MZ Two-stage gas train Δp (mbar)

kW	1	2			
		MB-ZR 410 S2 (Rp 1")	MB-ZR 412 S2 (Rp 1.1/4")	MB-ZR 415 S2 (Rp 1.1/2")	MB-ZR 420 S2 (Rp 2")
100	0,2	2,9	2,1	--	--
150	1,6	5,6	2,8	--	--
200	3,0	9,0	4,5	3,2	--
250	4,9	13,2	6,5	3,3	--
300	6,9	18,0	8,7	4,3	3,2
350	8,9	22,9	11,2	5,4	3,4
400	10,8	28,1	14,0	6,5	4,1
450	12,8	33,6	16,8	7,7	4,9
500	14,7	39,5	19,8	9,0	5,7
550	16,7	45,8	23,1	10,2	6,6

(A)

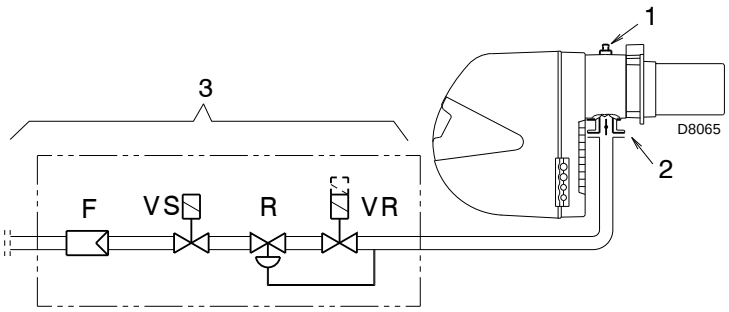

(B)

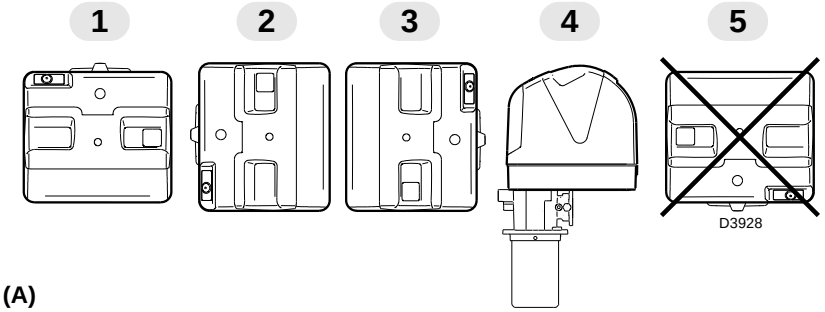

(A)

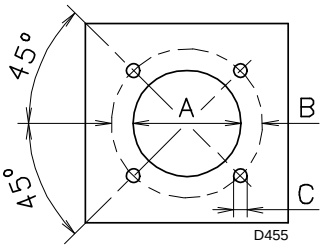

mm	A	B	C
RS 34/1 MZ	160	224	M8
RS 44/1 MZ	160	224	M8

(B)

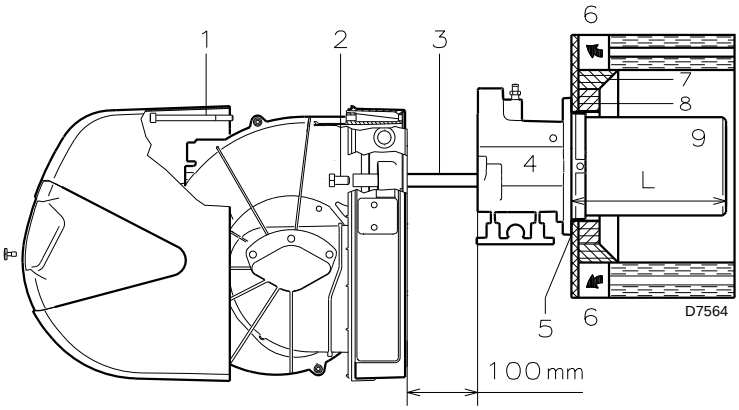

(C)

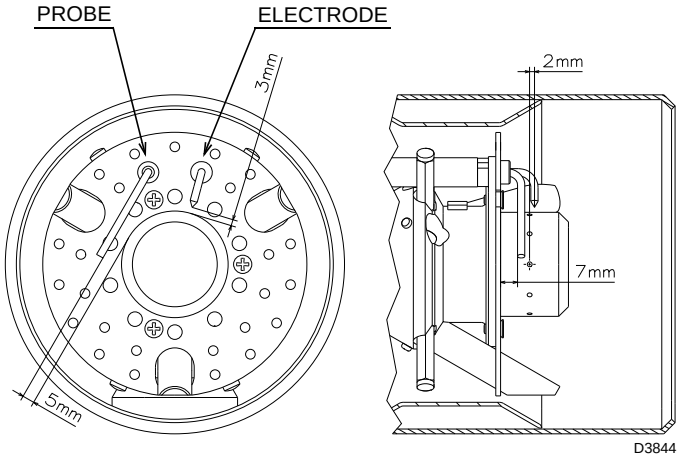

(D)

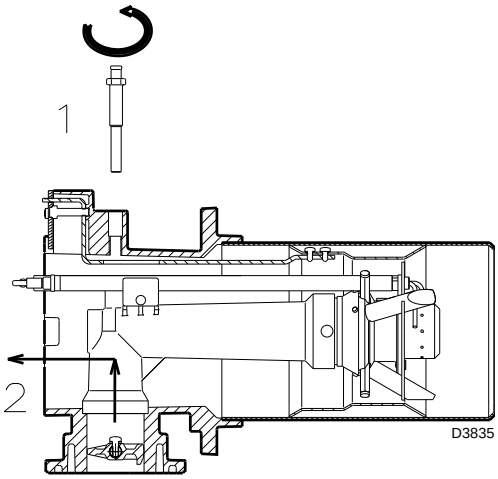

(E)

INSTALLATION

⚠ **THE BURNER MUST BE INSTALLED IN CONFORMITY WITH LEGISLATION AND LOCAL STANDARDS.**

WORKING POSITION (A)

⚠ The burner is designed to work only in the positions **1**, **2**, **3 and 4**.

Installation **1** is preferable, as it is the only one that allows the maintenance operations as described in this manual. Installations **2**, **3 and 4** allow the working, but make the operations of maintenance and checking of the combustion head more difficult page 15.

⊖ Any other position could compromise the correct working of the appliance.

Installation **5** is forbidden, for safety reasons.

BOILER PLATE (B)

Pierce the closing plate of the combustion chamber, as in (B). The position of the threaded holes can be marked using the thermal screen supplied with the burner.

BLAST TUBE LENGTH (C)

The length of the blast tube must be selected according to the indications provided by the manufacturer of the boiler, and in any case it must be greater than the thickness of the boiler door complete with its fettling.

The range of lengths available, L (mm), is as follows:

Blast tube 9)	RS 34/1 MZ	RS 44/1 MZ
• short	216	216
• long	351	351

For boilers with front flue passes 6) or flame inversion chambers, protective fettling in refractory material 8), must be inserted between the boiler fettling 7) and the blast tube 9).

This protective fettling must not compromise the extraction of the blast tube.

For boilers with a water-cooled frontpiece, a heat-resistant cover is not necessary 7)-8)(C), unless expressly requested from the boiler manufacturer.

FIXING THE BURNER TO THE BOILER (C)

Before fixing the burner to the boiler, check (from the opening of the blast tube) that the probe and the electrode are correctly positioned, as in (D).

Separate the combustion head from the rest of the burner, fig. (C):

- remove the screws 2) from the two slide bars 3);
- remove screw 1) and pull the burner back on slide bars 3) by about 100 mm;
- disconnect the probe and electrode leads, then unthread the burner completely from the guides.

Fix the unit 4)(C) to the boiler plate, inserting the supplied insulating gasket 5)(C).

Use the 4 screws, also supplied with the unit, after first protecting the thread with an anti-locking product. The seal between burner and boiler must be airtight.

If, in the previous check, the position of the probe or electrode was not correct, remove the screw 1)(E), extract the inner part 2)(E) of the head, and adjust them.

Do not rotate the probe: leave it as in (D).

If it is located too close to the ignition electrode, the control box amplifier may be damaged.

⚠ **ATTENTION**
Proceed with the assembly of the inner part 2)(E) of the combustion head, tightening the screw 1)(E) with a tightening torque of **4 ÷ 6 Nm**.

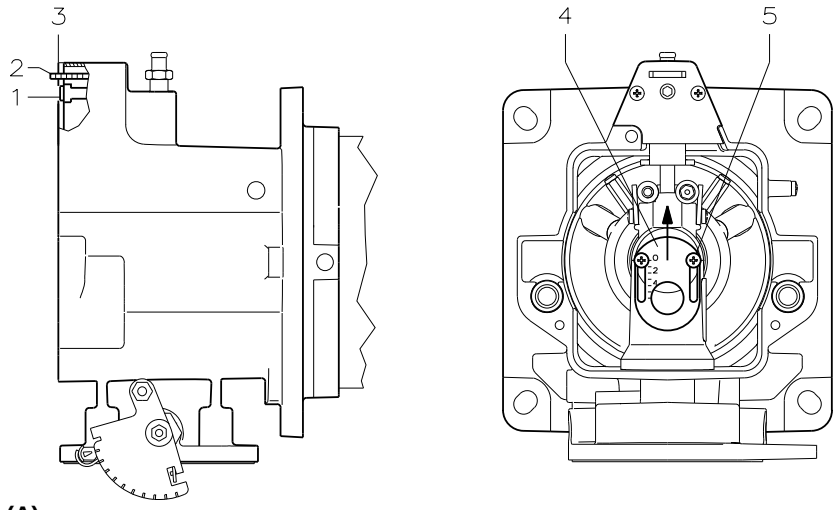

(A)

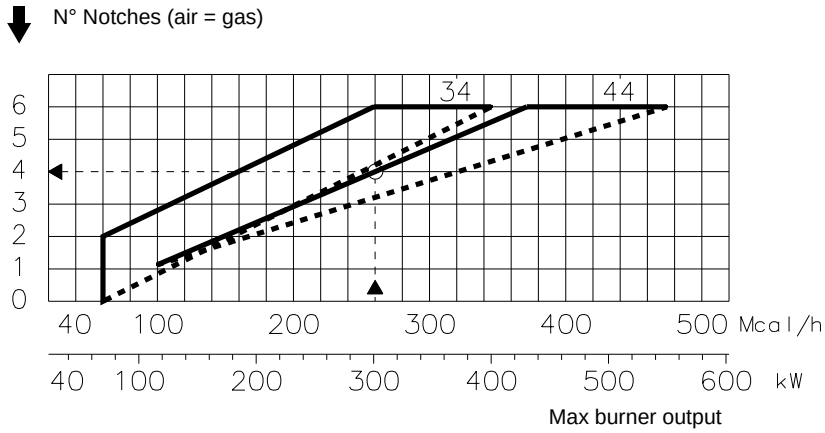

(B)

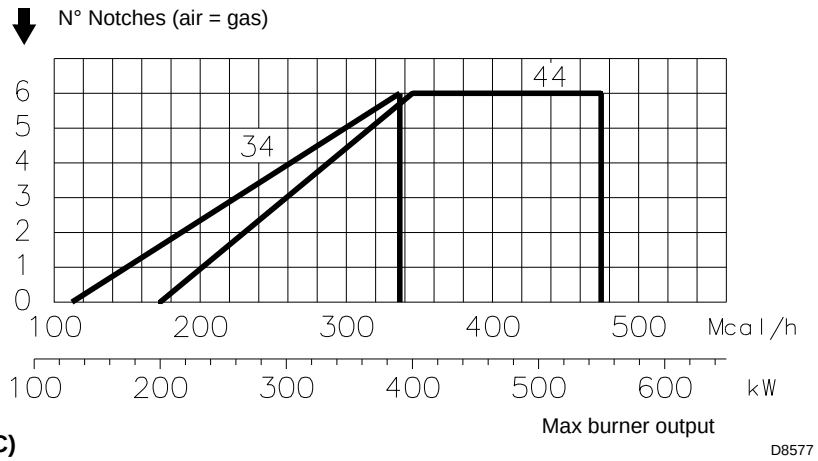

(C)

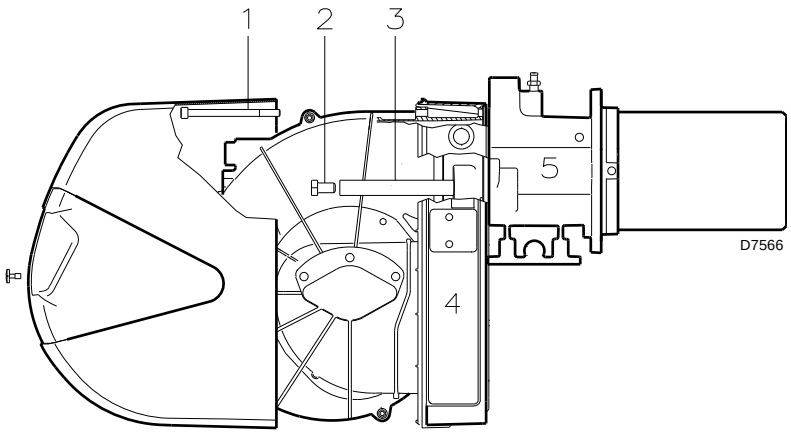

(D)

COMBUSTION HEAD SETTING

Installation operations are now at the stage where the blast tube and sleeve are secured to the boiler as shown in fig. (A). It is therefore particularly easy to adjust the combustion head.

Air adjustment (A - B)

Rotate the screw 1)(A) until the notch on the lamina 2)(A) corresponds with the surface of the plate 3)(A).

Example:

RS 44/1 MZ burner, output = 300kW.
From diagram (B) you can see that, for the MAX output of 300 kW, the air should be adjusted at notch 4, subtracted from the value of the pressure in the chamber. In this case, the loss of pressure in the combustion head is shown in column 1 on page 6 - 7.

Note

If the pressure in the chamber is equal to 0 mbar, the air is adjusted with reference to the broken line of the diagram (B).

Central air adjustment (A - C)

n case the application needs a particular setup, it is possible to modify the central air delivery using the ring nut 4)(A) up to the notch indicated in diagram (C).
In order to carry out this operation, unscrew the screws 5)(A) and lift up the ring nut 4)(A). At the end, tighten the screws 5)(A) again.

Once you have finished adjusting the head, reassemble the burner 4)(D) on the guides 3)(D) at about 100mm from the pipe coupling 5)(D) - burner in the position shown in fig. (C)p.8 - insert the cable of the probe and the cable of the electrode, then slide the burner as far as the pipe coupling, burner in the position shown in fig. (D).
Refit the screws 2) on the guides 3).
Fix the burner to the pipe coupling with the screw 1).

Attention

When fitting the burner on the two slide bars, it is advisable to gently draw out the high tension cable and flame detection probe cable until they are slightly stretched.

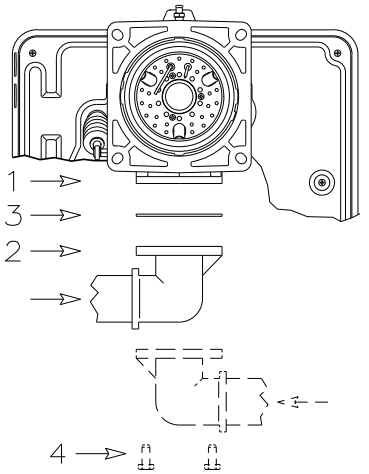

(A) D3839

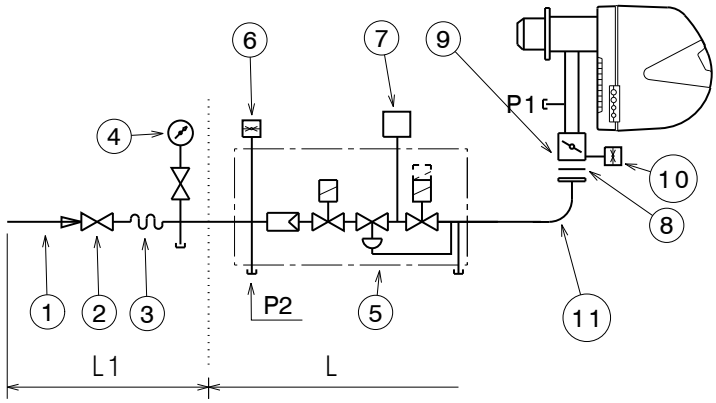

(B) D8066

BURNERS AND RELATIVE GAS TRAINS APPROVED ACCORDING TO EN 676

GAS TRAINS L (One-stage)				BURNER		7	9
Code	Model	Ø	C.T.	RS 34/1	RS 44/1	Code	Code
3970602	MBC 120	3/4”	♣	•	-	-	3000824
3970553 3970229*	MB-DLE 407 S20	3/4”	-	•	-	3010123	3000824
3970599	MB-DLE 407 S52	3/4”	-	-	•	3010123	3000824
3970554 3970230*	MB-DLE 410 S20	1”	-	•	•	3010123	3000824
3970258	MB-DLE 410 S52	1”1/4			•	3010123	3000824
3970144 3970231*	MB-DLE 412 S20	1”1/4	-	•	•	3010123	-
3970180 3970232*	MB-DLE 415 S20	1”1/2	-	•	•	3010123	-
3970181 3970233* 3970182 3970234*	MB-DLE 420 S20	2”	- - ♦ ♦	•	•	3010123 3010123 - -	3000822

GAS TRAINS L (Two-stage)				BURNER		7	9
Code	Model	Ø	C.T.	RS 34/1	RS 44/1	Code	Code
3970046	MB-ZRDLE 407 S20	3/4”	-	•	-	3010123	3000824
3970079	MB-ZRDLE 410 S20	1”	-	•	•	3010123	3000824
3970152	MB-ZRDLE 412 S20	1”1/4	-	•	•	3010123	-
3970183	MB-ZRDLE 415 S20	1”1/2	-	•	•	3010123	-
3970184 3970185	MB-ZRDLE 420 S20	2”	- ♦	• •	• •	3010123 -	- 3000822

*** Trains complete with 6-pin plug for connection to burner.**

(C)

GAS FEEDING LINE

- The gas train must be connected to the gas attachment 1)(A), using the flange 2), gasket 3) and screws 4) supplied with the burner.
- The gas train can enter the burner from the right or left side, depending on which is the most convenient, see fig. (A).
- The gas solenoids must be as close as possible to the burner, to ensure that the gas reaches the combustion head within the safety time of 3s.

GAS TRAIN (B)

Approved, together with the burner, according to the regulation EN 676, and supplied separately from the burner, with the code indicated in the tables (C). It is possible to use the one-stage gas train of table (C) up to a power of 550 kW, limiting the ignition output according to the standard, with the aid of only the brake, as specified on page 12.

KEY TO LAY-OUT (B)

1 - Gas input pipe
2 - Manual valve
3 - Vibration damping joint
4 - Pressure gauge with pushbutton cock
5 - Multibloc, including:
  - filter (replaceable)
  - one-stage or two-stage working valve
  - pressure adjuster
6 - Minimum gas pressure switch
7 - Valve seal checking device.
  In accordance with the standard EN 676, gas valve leak detection control devices are compulsory for burners with maximum outputs of more than 1200 kW.
8 - Gasket
9 - Gas train/burner adaptor

P1 - Pressure at combustion head
P2 - Up-line pressure of valves/adjuster

L - Gas train supplied separately with the code indicated in tables (C)
L1 - The responsibility of the installer

KEY TO LAY-OUT FOR TABELS (C)

C.T.= Checking device for gas valves seal:
- = Gas train without gas valve leak detection control device; device that can be ordered separately and assembled subsequently (see Column 7).
♦= Train with seal checking device already assembled.
♣= With this train the integrated leak detection cannot be activated.

7 = VPS valve leak detection control device. Supplied separately from gas train on request.

9 = Gas train/burner adaptor. Supplied separately from gas train on request.

Note

See the accompanying instructions for the adjustment of the gas train.

MIN GAS PRESSURE SWITCH

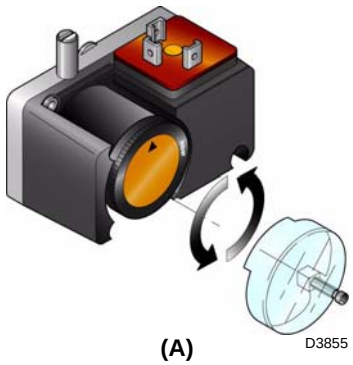

(A)

AIR PRESSURE SWITCH

(B)

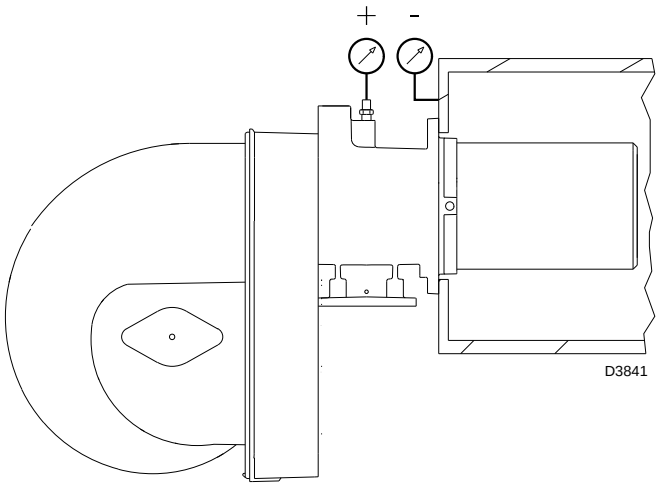

(C)

ADJUSTMENTS BEFORE FIRST FIRING

⚠ **ATTENTION**

THE FIRST FIRING MUST BE CARRIED OUT BY QUALIFIED PERSONNEL WITH THE RIGHT INSTRUMENTS.

Adjustment of the combustion head, and air and gas deliveries has been illustrated on page 9.
In addition, the following adjustments must also be made:

- open manual valves up-line from the gas train.
- Adjust the minimum gas pressure switch to the start of the scale (A).
- Adjust the air pressure switch to the start of the scale (B).
- Purge the air from the gas line.
  Continue to purge the air (we recommend using a plastic tube routed outside the building) until gas is smelt.
- Assemble a pressure gauge (C) on the gas pressure socket of the pipe coupling.
  The manometer readings are used to calculate burner power using the tables on page 6 and 7.
- Connect two lamps or testers to the two gas line solenoid valves VR and VS, to check the exact moment at which voltage is supplied.
  This operation is unnecessary if each of the two solenoid valves is equipped with a pilot light that signals voltage passing through.
- Fan air damper: leave at the factory setting.

Before starting up the burner, it is good practice to adjust the gas train so that firing takes place in conditions of maximum safety, i.e. with gas delivery at the minimum.

BURNER START-UP

Close the control devices.
As soon as the burner starts check the direction of rotation of the fan blade, looking through the flame inspection window 18)(A)p.4.
Make sure that the lamps or testers connected to the solenoids, or pilot lights on the solenoids themselves, indicate that no voltage is present. If voltage is present, then **immediately** stop the burner and check electrical connections.

BURNER FIRING

Having completed the checks indicated in the previous heading, ignition of the burner should be achieved. If the motor starts but the flame does not appear and the control box goes into lockout, reset and wait for a new firing attempt.
If firing is still not achieved, it may be that gas is not reaching the combustion head within the safety time period of 3 seconds. In this case increase gas firing delivery.
The arrival of gas to the pipe coupling is shown by the pressure gauge (C).
Once firing has taken place, proceed with global burner calibration operation.

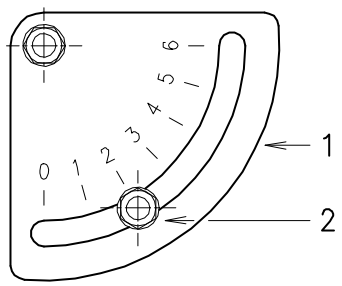

(A) D593

BURNER CALIBRATION
The optimum calibration of the burner requires an analysis of the exhaust gases at the boiler outlet.

Adjust successively:
1 - Maximum output;
2 - Air pressure switch;
3 - Minimum gas pressure switch.

DETERMINATION OF OUTPUT UPON FIRING (MINIMUM)
According to the regulation EN 676.

Burners with MAX output up to 120 kW
Firing can be performed at the maximum operation output level. Example:
- max. operation output : 120 kW
- max. firing output : 120 kW

Burners with MAX output above 120 kW
Firing must be performed at a lower output than the max. operation output.
If firing output does not exceed 120 kW, no calculations are required. If firing output exceeds 120 kW, the regulations prescribe that the value be defined according to the control box "ts" safety time:
for "ts" = 3s, firing output must be equal to, or lower than, 1/3 of max. operation output.

Example
MAX operation output of 450 kW.
The firing output must be equal to, or less than, 150 kW with ts = 3s

In order to measure the firing output:
- disconnect the plug-socket 23)(A)p.4 on the ionisation probe cable (the burner will fire and then go into lockout after the safety time has elapsed).
- Perform 10 firings with consecutive lockouts.
- Read, on the meter, the quantity of gas burned.
  This quantity must be equal to, or lower than, the quantity given by the formula, for ts = 3s:

$$\mathbf{Vg} = \frac{\mathbf{Qa}\ (\text{max. burner output})\ \mathbf{x\ n\ x\ ts}}{\mathbf{3600}}$$

Vg: volume supplied upon firings carried out (Sm^3)
Qa: firing output (Sm^3/h)
n: number of firings (10)
ts: safety time (sec)

Example for gas G 20 (9.45 kWh/Sm^3):
firing output 150 kW
corresponding to 15.87 Sm^3/h.
After 10 firings with lockout, the output indicated on the meter must be equal to, or less than:

$$\mathbf{Vg} = \frac{\mathbf{15{,}87\ x\ 10\ x\ 3}}{\mathbf{3600}} = \mathbf{0{,}132\ Sm^3}$$

1 - MAXIMUM OUTPUT
The maximum output of the burner must be set within the firing rate range shown on page 5.

Adjusting gas delivery
Measure the delivery of gas from the gas meter. A guideline indication can be calculated from the tables on page 6, simply read off the gas pressure on the manometer, see fig.(C) on page 11, and follow the instructions on pages 6 - 7.
- If delivery needs to be reduced, diminish outlet gas pressure and, if it is already very low, slightly close adjustment valve VR2.
- If delivery needs to be increased, increase outlet gas pressure.

Adjusting air delivery
Adjust the fan air damper by using the indexed selector 1)(A) after having loosened the screw 2)(A).

AIR PRESSURE SWITCH 4)(A)p. 4

D3951

(A)

MINIMUM GAS PRESSURE SWITCH

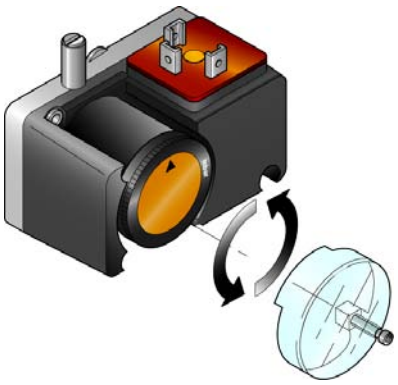

D3855

(B)

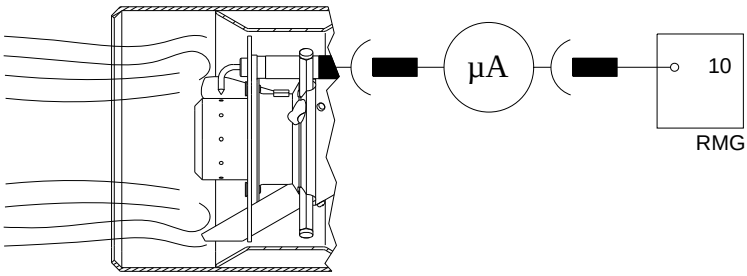

D3843

(C)

Note
Once you have finished adjusting maximum output, check firing once again: noise emission at this stage must be identical to the following stage of operation. If you notice any sign of pulsations, reduce the firing stage delivery.

2 - AIR PRESSURE SWITCH (A)
Adjust the air pressure switch after having performed all other burner adjustments with the air pressure switch set to the start of the scale (A).

With the burner working insert a combustion analyser in the stack, slowly close the suction inlet of the fan (for example, with cardboard) until the CO value does not exceed 100 ppm.
Then slowly turn the appropriate knob clockwise until the burner reaches the lockout position.
Check the indication of the arrow pointing upwards on the graduated scale (A). Turn the knob clockwise again, until the value shown on the graduated scale corresponds with the arrow pointing downwards (A), and so recovering the hysteresis of the pressure switch (shown by the white mark on a blue background, between the two arrows).
Now check the correct start-up of the burner.
If the burner locks out again, turn the knob anti-clockwise a little bit more.

3 - MINIMUM GAS PRESSURE SWITCH (B)
With the burner operating, increase adjustment pressure by slowly turning the relative knob clockwise until the burner locks out.
Then turn the knob anti-clockwise by 5mbar and repeat burner starting to ensure it is uniform.
If the burner locks out again, turn the knob anti-clockwise again by 1mbar.

FLAME PRESENCE CHECK (C)
The burner is fitted with an ionisation system which ensures that a flame is present. The minimum current necessary for the control box operation is 5 µA. The burner supplies a significantly higher current value, so that no check is usually needed. However, if it is necessary to measure the ionisation current, disconnect the plug-socket 23)(A)p.4 on the ionisation probe cable and insert a direct current microamperometer with a base scale of 100 µA. Carefully check polarities.

STANDARD FIRING
(n° = seconds from the moment 0)

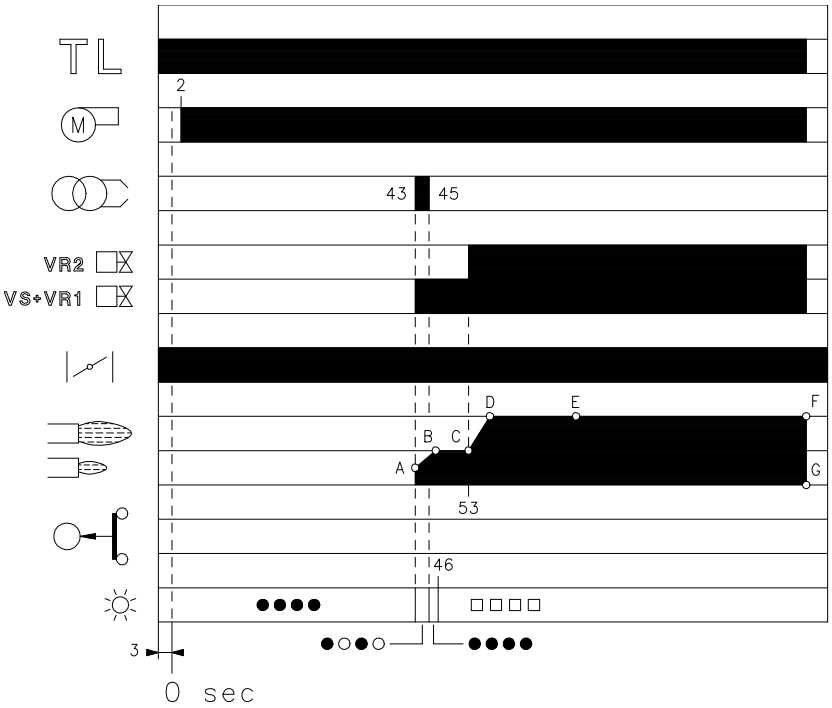

* ○ Off ● Yellow □ Green ▲ Red
For further details see page 16.

(A) D3024

NO FIRING

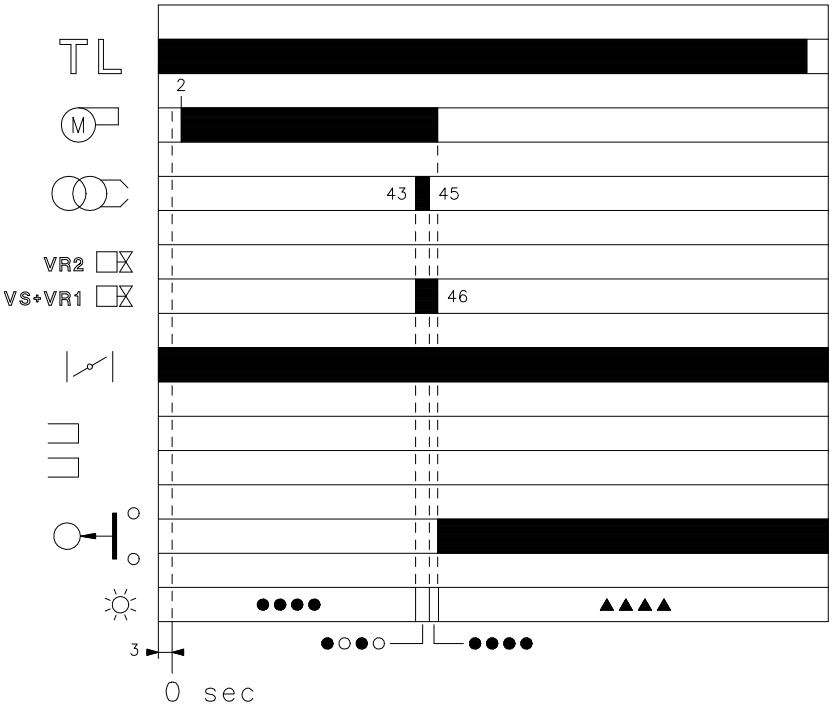

* ○ Off ● Yellow ▲ Red
For further details see page 16.

(B) D3025

BURNER OPERATION

BURNER START-UP (A)

- Control device TL closes.
  After about 3s:
- 0 s : The control box starting cycle begins.
- 2 s : Fan motor starts.
  The air gate valve is set on maximum adjustment output.
  The pre-purge stage follows.
- 43 s : Ignition electrode strikes a spark.
- Safety valve VS and the 1st stage VR1 of the adjustment valve VR open. The shutter of valve VR1 has a first rapid run that determines a low output firing, point A, which is followed by a slow run. The output increases progressively up to a 1st stage value, section A-B.
- 45 s : The spark goes out.
- 53 s : The 2nd stage VR2 of valve VR opens and the output passes slowly from the 1st stage to the maximum adjustment valve, section C-D.
- The control value box starting cycle ends.

STEADY STATE OPERATION (A)

At the end of the starting cycle, the control box continues to check that the flame is present and that the air pressure switch is in the correct position.

The burner continues to operate at constant output.
If the temperature or pressure in the boiler continues to rise, and opens load control TL, the burner will stop, section F-G.

FIRING FAILURE (B)

If the burner does not fire, it goes into lockout within 3 s of the opening of the gas solenoid valve and 49 s after the closing of control device TL.
The red led of the control box comes on.

UNDESIRED SHUTDOWN DURING OPERATION

If the flame should accidentally go out during operation, the burner will lock out within 1s.

FINAL CHECKS (with the burner working):

- disconnect a wire of the minimum gas pressure switch;
- switch on the thermostat/pressure switch TL;
- switch on the thermostat/pressure switch TS;

the burner must stop.

- Disconnect the air adduction tube of the pressure switch;
- disconnect the wire of the ionisation probe;

the burner must stop in lockout.

Make sure that the mechanical locking systems on the various adjustment devices are fully tightened.

MAINTENANCE

⚠ The burner requires periodic maintenance carried out by a qualified and authorised technician **in conformity with legislation and local standards**.

⚠ Periodic maintenance is essential for the reliability of the burner, avoiding the excessive consumption of fuel and consequent pollution.

⚠ Before carrying out any cleaning or control, always switch off the electrical supply to the burner, using the main switch of the system.

Combustion

The optimum calibration of the burner requires an analysis of the exhaust gases. Significant differences with respect to the previous measurements indicate the points where more care should be exercised during maintenance.

Gas leaks

Make sure there are no gas leaks on the pipework between the gas meter and the burner.

Gas filter

Substitute the gas filter when dirty (see train instructions).

Combustion head

Open the burner and make sure that all components of the combustion head are in good condition, not deformed by the high temperatures, free of impurities from the surroundings and correctly positioned. If in doubt, disassemble the elbow.

Burner

Check for excess wear or loose screws in the mechanisms that control the air damper and the gas butterfly valve. In addition, the screws that fix the cables in the terminal board must be blocked, along with the burner sockets.
Clean the outside of the burner.

Combustion

Adjust the burner if the combustion values found at the beginning of the operation do not comply with the regulations in force, or at any rate, do not correspond to good combustion.
Use the appropriate card to record the new combustion values; they will be useful for subsequent controls.

BURNER START-UP PROGRAMME DIAGNOSTICS

During start-up, the indications are explained in the following table:

COLOUR CODE TABLE	
Sequences	**Colour code**
Pre-purging	●●●●●●●●●
Firing phase	●○●○●○●○●
Operation, flame OK	□□□□□□□□□
Operation with weak flame signal	□○□○□○□○□
Electrical supply lower than ~ 170V	●▲●▲●▲●▲●
Lockout	▲▲▲▲▲▲▲▲▲
Extraneous light	▲□▲□▲□▲□▲
Key to layout: ○ Off ● Yellow □ Green ▲ Red	

RESET OF CONTROL BOX AND DIAGNOSTICS USE

The control box supplied features a diagnostics function, through which any causes of malfunctioning can be easily identified (indicator: **RED LED** signal).
To use this function, wait at least 10 seconds from when the safety condition has been set (**lockout**), then press the reset button.
The control box generates a sequence of led pulses (1 second apart) that is repeated at constant intervals of 3 seconds.
Once the number of LED pulses has been visualised, and the possible cause identified, it is necessary to reset the system, keeping the button pressed for 1-3 seconds.

RED LED illuminated wait at least 10s	Lockout	Press reset for > 3 s	LED pulses	Interval 3 s	LED pulses
			● ● ● ● ●		● ● ● ● ●

Below, a list of the possible methodologies for carrying out the resetting of the control box and for using the diagnostics.

CONTROL BOX RESET

To reset the control box, proceed as follows:
- Press and hold the button for 1-3 seconds.
  The burner starts up again, 2 seconds after the button is released.
  If the burner does not restart, make sure the limit thermostat is closed.

VISUAL DIAGNOSTICS

Indicate the type of burner fault that leads to the lockout.
To display the diagnostic, proceed as follows:
- Keep the button pressed for more than 3 seconds from when the red led (burner lockout) switches on.
  The end of the operation will be shown by a yellow led pulse.
  Release the button when you see the flashing. The number of times it pulses tells you the cause of the malfunction, according to the coding system indicated in the table on page 17.

SOFTWARE DIAGNOSTICS

Gives an analysis of the life of the burner, through optical connections with a PC showing the working hours, number and types of lockout, control box serial number etc.
To display the diagnostic, proceed as follows:
- Keep the button pressed for more than 3 seconds from when the red led (burner lockout) switches on.
  The end of the operation will be shown by a yellow LED pulse.
  Release the button for 1 second, then press it again for more than 3 seconds, until you see another yellow flash.
  When you release the button, the red led will flash intermittently with high frequency: only then is it possible to insert the optical connection.

When the operation is completed, it is necessary to reset the start-up condition of the control box, using the reset procedure described above.

PRESSURE ON THE BUTTON	STATE OF CONTROL BOX
From 1 to 3 seconds	Reset of the control box without visualisation of the visual diagnostics.
More than 3 seconds	Visual diagnostics of the lockout condition: (led flashes at 1 second intervals).
More than 3 seconds, starting from the condition of visual diagnostics	Software diagnostics, with the help of optical interface and PC (possibility to visualise the working hours, irregularities, etc.)

The sequence of pulses issued by the control box identifies the possible types of malfunction, which are listed in the table on page 17.

Signal	Problem	Possible cause	Recommended remedy
2 blinks ● ●	Once the pre-purging phase and safety time have passed, the burner goes into lockout without the appearance of the flame	1 - The operation solenoid lets little gas through	Increase
		2 - One of the two solenoid valves does not open	Replace
		3 - Gas pressure too low	Increase pressure at governor
		4 - Ignition electrode incorrectly adjusted	Adjust, see fig. (D) page 8
		5 - Electrode grounded due to broken insulation	Replace
		6 - High voltage cable defective	Replace
		7 - High voltage cable deformed by high temperature	Replace and protect
		8 - Ignition transformer defective	Replace
		9 - Incorrect valve or transformer electrical wiring	Check
		10 - Defective control box	Replace
		11 - A closed valve upline the gas train	Open
		12 - Air in pipework	Bleed air
		13 - Gas valves unconnected or with interrupted coil	Check connections or replace coil
3 blinks ● ● ●	The burner does not switch on, and the lockout appears	14 - Air pressure switch in operating position	Adjust or replace
	The burner switches on, but then stops in lockout	- Air pressure switch inoperative due to insufficient air pressure:	
		15 - Air pressure switch incorrectly adjusted	Adjust or replace
		16 - Pressure switch pressure test point pipe blocked	Clean
		17 - Poorly adjusted head	Adjust
		18 - High pressure in the furnace	Connect air pressure switch to fan suction line
	Lockout during pre-purging phase	19 - Defective motor control contactor (only three-phase version)	Replace
		20 - Defective electrical motor	Replace
		21 - Motor lockout (defective electrical motor)	Replace
4 pulses ● ● ● ●	The burner switches on, but then stops in lockout	22 - Flame simulation	Replace the control box
	Lockout when burner stops	23 - Permanent flame in the combustion head or flame simulation	Eliminate persistence of flame or replace control box
7 blinks ● ● ● ● ● ● ●	The burner goes into lockout immediately following the appearance of the flame	24 - The operation solenoid lets little gas through	Increase
		25 - Ionisation probe incorrectly adjusted	Adjust, see fig. (D) page 8
		26 - Insufficient ionisation (less than 5 A)	Check probe position
		27 - Earth probe	Withdraw or replace cable
		28 - Burner poorly grounded	Check grounding
		29 - Phase and neutral connections inverted	Invert them
		30 - Defective flame detection circuit	Replace the control box
	Burner goes into lockout during operation	31 - Probe or ionisation cable grounded	Replace worn parts
10 blinks ● ● ● ● ● ● ● ● ● ●	The burner does not switch on, and the lockout appears	32 - Incorrect electrical wiring	Check
	The burner goes into lockout	33 - Defective control box	Replace
		34 - Presence of electromagnetic disturbances in the thermostat lines	Filter or eliminate
		35 - Presence of electromagnetic disturbance	Use the radio disturbance protection kit
No blink	The burner does not start	36 - No electrical power supply	Close all switches - Check connections
		37 - A limiter or safety control device is open	Adjust or replace
		38 - Line fuse blocked	Replace
		39 - Defective control box	Replace
		40 - No gas supply	Open the manual valves between contactor and train
		41 - Mains gas pressure insufficient	Contact your GAS COMPANY
		42 - Minimum gas pressure switch fails to close	Adjust or replace
	The burner continues to repeat the start-up cycle, without lockout	43 - The gas pressure in the gas mains lies very close to the value to which the minimum gas pressure switch has been set. The sudden drop in pressure after valve opening causes temporary opening of the pressure switch itself, the valve immediately closes and the burner comes to a halt. Pressure increases again, the pressure switch closes again and the ignition cycle is repeated. And so on	Reduce the minimum gas pressure switch intervention pressure. Replace the gas filter cartridge.
	Ignition with pulsations	44 - Poorly adjusted head	Adjust. See page 9
		45 - Ignition electrode incorrectly adjusted	Adjust, see fig. (D) page 8
		46 - Incorrectly adjusted fan air damper: too much air	Adjust
		47 - Output during ignition phase is too high	Reduce

NORMAL OPERATION / FLAME DETECTION TIME

The control box has a further function to guarantee the correct burner operation (signal: **GREEN LED** permanently on).
To use this function, wait at least ten seconds from the burner ignition and then press the control box button for a minimum of 3 seconds.
After releasing the button, the GREEN LED starts flashing as shown in the figure below.

GREEN LED on wait at least 10s	Press button for > 3s	signal	Interval 3s	signal
		● ● ● ● ● ●		● ● ● ● ● ●

The pulses of the LED constitute a signal spaced by approximately 3 seconds.
The number of pulses will measure the probe DETECTION TIME since the opening of gas valves, according to the following table:

SIGNAL	FLAME DETECTION TIME
1 blink ●	0.4s
2 blinks ● ●	0.8s
6 blinks ● ● ● ● ● ●	2.8s

This is updated in every burner start-up.
Once read, the burner repeats the start-up cycle by briefly pressing the control box button.
WARNING
If the result is > 2s, ignition will be retarded.
Check the adjustment of the hydraulic brake of the gas valve, the air damper and the combustion head adjustment.

KIT INTERFACE ADAPTER RMG TO PC Code **3002719**

APPENDIX

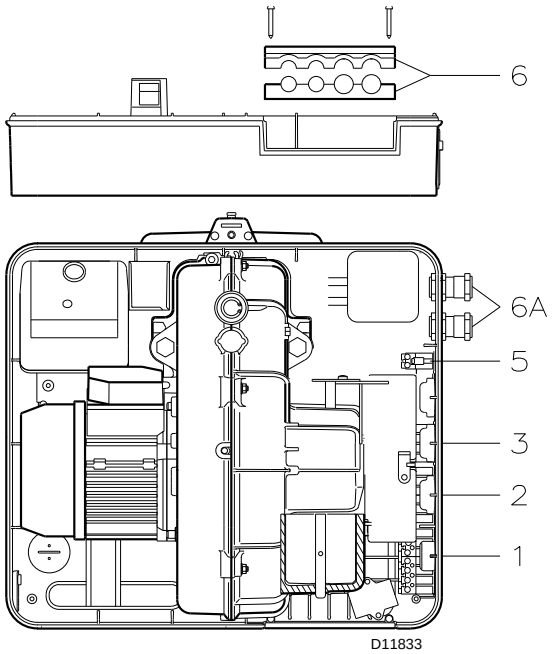

Electrical connections

NOTES

The electrical wirings must be carried out in conformity with the regulations in force in the countries of destination, and by qualified personnel.
Riello S.p.A. cannot accept any responsibility for modifications or connections other than those shown in these diagrams.

Use flexible cables, in accordance with the regulation EN 60 335-1.

All the cables to be connected to the burner must pass through cable grommets.

The use of cable grommets can take various forms; the following way is just one possible solution:

RS 34-44/1 MZ

1-	7-pole socket for single-phase power supply, thermostat/pressure switch TL
2-	6-pole socket for gas valves, gas pressure switch or device for checking the valve seal
3-	4-pole socket for thermostat/pressure switch TR
5-	2-pole socket for accessories
6 - 6A	Fittings for pipe unions (Pierce, if it is necessary to use the pipe unions 6A)

NOTE

The RS 34-44/1 MZ -burners have been type-approved for intermittent operation. This means they should be "Compulsorily" stopped at least once every 24 hours to enable the control box to perform a check of its own efficiency at start-up. Normally, the stopping of the burner is guaranteed by the boiler's thermostat/pressure switch. If this is not the case, a time switch should be fitted in series to IN to provide for burner shutdown at least once every 24 hours.

ATTENTION:
- Do not invert the neutral with the phase in the electrical supply line. An inversion would lead to lockout due to firing failure.
- Replace the components only with original spare parts.

识别
产品铭牌上印有序列号、型号、主要技术及性能数据。如果铭牌被篡改、拆除或丢失，产品型号不容易识别，安装或维修过程中会存在潜在危险。

通用警告
为了保证燃烧污染物排放降至最低，锅炉燃烧室的尺寸必须满足特定尺寸。
建议在给特殊锅炉选择燃烧器时，咨询我们的技术支持部门。
有资质人员是指那些经过专业培训机构培训合格的专业技术人员。
该燃烧器只能用于设计时指定的应用。
由于错误安装或错误调整，或不正确或不合理使用，或没有遵照随燃烧器附带的使用说明书来使用，或由无资质人员操作等因素所造成的任何人、畜、财产损失，制造商概不负责。

用户告知
如果燃烧器在点火或运行中出现故障，燃烧器执行“安全停机”，会有红色 LED 指示灯指示燃烧器锁定。要重新启动燃烧器，按一下复位按钮。燃烧器重新启动后，红色 LED 指示灯熄灭。
这个操作最多允许重复 3 次，如果“安全停机”还是发生，请联系我们的技术支持部门。

基本安全规则
- ➤ 严禁未成年人和无资质人员操作此设备。
- ➤ 在安装燃烧器房间的通风孔，进气格栅，排气格栅上不允许覆盖衣物、纸张或其他任何东西。
- ➤ 非认证人员不允许维修燃烧器。
- ➤ 拉出或缠绕电源插头是危险的。
- ➤ 清洁燃烧器前要断开主电源。
- ➤ 不要使用易燃物来擦拭燃烧器（ 如酒精、汽油等)。
- ➤ 盖子可以用肥皂水擦拭。
- ➤ 不要在燃烧器上放置任何东西。
  不要在安装燃烧器的房间放置易燃物。

本手册使用的如下符号，解释如下：
⚠ **注意** = 操作者需要特别注意并有所准备。
⛔ **禁止** = 对操作者，**决不允许这样做**。

CN 目录

注意：
文中提及的图按如下方式标识：
1)(A) =本页的图 A 的第一部分；
1)(A) 页 3=第 3 页的图 A 的第一部分。

说明书的相关信息

引言
说明书随燃烧器一起提供：
- 说明书是产品不可或缺的组成部分，不得将其与产品分离；因此必须小心保存以便查阅，如果将燃烧器转给另一个用户或转移至另一个系统，则说明书必须跟随燃烧器一起转移。如果说明书损坏或丢失，则必须从您就近的 RIELLO Technical Assistance Centre（技术支持中心）索取说明书的复印件；
- 说明书只能由有资格的人员使用；
- 说明书提供了有关燃烧器安装、启动、使用和维护的重要指示和安全警告。

系统和说明书的交付
一旦交付系统：
- 系统制造商也必须将说明书交付给用户，并建议其将说明书保存在热发生器的安装区域附近。
- 说明书上显示：
  - 燃烧器的序列号；

    . . . . . .

  - 最近 Assistance Centre（支持中心）的地址和电话号码；

    . . . . . .
    . . . . . .
    . . . . . .

- 系统制造商必须告知用户有关以下内容的准确信息：
  - 系统的使用；
  - 启动系统前需要进行的测试；

– 必需的维护和检查（每年必须由制造商代表或别的专业技术人员至少检查系统一次）。
要保证定期检查，RIELLO 建议遵照 Maintenance Contract（维护合同）的规定。

技术数据

型号		RS 34/1 MZ		RS 44/1 MZ	
类型		886 T		873 T	
出力 (1)	kW Mcal/h	70 - 390 60 - 336		100 - 550 86 - 473	
燃料		天然气 : G20 - G21 - G22 - G23 - G25			
		G20	G25	G20	G25
- 净热值	kWh/Sm^3 Mcal/ Sm^3	9.45 8.2	8.13 7.0	9.45 8.2	8.13 7.0
- 绝对密度	kg/Sm3	0.71	0.78	0.71	0.78
- 最大燃气量	Sm3/h	35	40	49	57
- 最大燃气量时的燃气压力 (2)	mbar	13.1	18.4	16.7	23.2
运行方式		• 开 - 关 （每 24 小时至少停机一次)。 • 一段火			
标准应用		锅炉：热水炉，蒸气炉，导热油炉			
环境温度	°C	0 - 40			
助燃空气温度	°C 最大	60			
电源	V Hz	230 ~ +/-10% 50/60 - 单相			
电机	rpm W V A	2800/3400 300 220 - 240 2.4		2820/3400 420 220 - 240 3	
启动电流	A	15		17	
工作电流	A	3.2		3.5	
电机电容	µF/V	12.5/400		12.5/450	
点火变压器	V1 - V2 I1 - I2	230 V - 1 x 15kV 1 A - 25mA			
电功消耗	W 最大	600		700	
电气防护等级		IP 40			
遵循的 EEC 指令		90/396 - 2004/108 - 2006/95 - 2006/42			
噪声等级 (3) 声压 声功率	dBA	68 79		70 81	
认证	CE	0085BR0380		0085BR0380	

(1) 参照条件 : 环境温度 20°C - 燃气温度 15°C - 气压 1013 海拔 0 m a.s.l.
(2) 测点第 4 页 8)(A) 处的压力，参考条件为炉膛背压为零且燃烧器最大出力。
(3) 发声测试按照指令 EN 15036-1 在制造商燃烧实验室中执行，σ 测量精度 = ± 1.5 dB，且燃烧器在试验锅炉上以最大输出功率运行。

基本型号

型号	燃烧头长度 mm
RS 34/1 MZ	216 351
RS 44/1 MZ	216 351

燃气类型

国家	类型
IT - AT - GR - DK - FI - SE ES - GB - IE - PT NL FR DE BE LU	$II_{2H3B/P}$ II_{2H3P} $II_{2L3B/P}$ II_{2Er3P} $II_{2ELL3B/P}$ $I_{2E(R)B}$, I_{3P} $II_{2E\ 3B/P}$

配件（可选）：

• 无线电干扰保护套件
由于存在变换器，在将燃烧器安装于极易受无线电干扰（信号发射超过 10 V/m）的位置时，或在节温器连接长度超过 20 米的应用场合，提供一保护套件，用作控制箱和燃烧器之间接口。

燃烧器	**RS 34/1 MZ - RS 44/1 MZ**
代码	3010386

• 加长燃烧头

燃烧器	**RS 34/1 MZ**	**RS 44/1 MZ**
代码	3010428	3010429

• LPG 组件：该组件允许 RS 34-44/1 MZ 燃烧 LPG

燃烧器	**RS 34/1 MZ**	**RS 44/1 MZ**
出力 kW	80 - 390 kW	120 - 530 kW
燃烧头长度 mm	216 - 351	216 - 351
代码	3010423	3010424

• 最高燃气压力开关	代码 3010418
• 无源接触器组件	代码 3010419
• 后吹扫组件	代码 3010452
• 接地保护组件	代码 3010448
• 连续吹扫组件	代码 3010449
• 计时器组件	代码 3010450
• 连接 RMG 至 PC 机的接口适配器组件	代码 3002719

• 匹配燃烧器的燃气阀组符合 EN 676 标准（包括电磁阀，压力调节器和过滤器）: 见第九页。

注意：安装方负责增加其它没有在本手册中注明的任何其他安全设备。

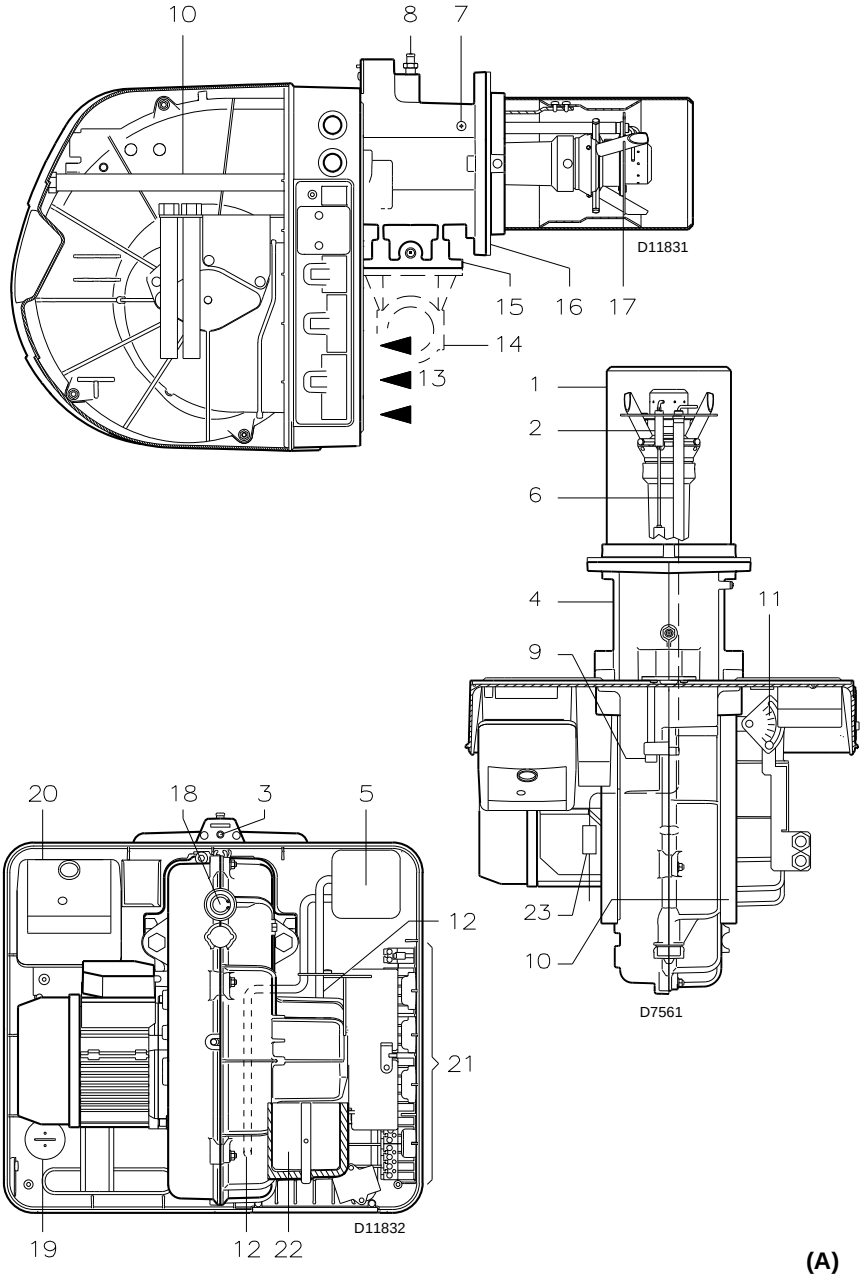

(A)

mm	A	B	C	kg
RS 34/1 MZ	1000	500	485	-
RS 44/1 MZ	1000	500	485	-

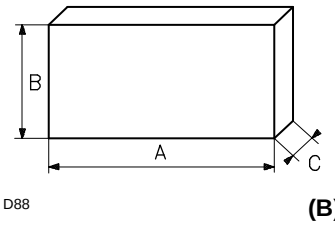

(B)

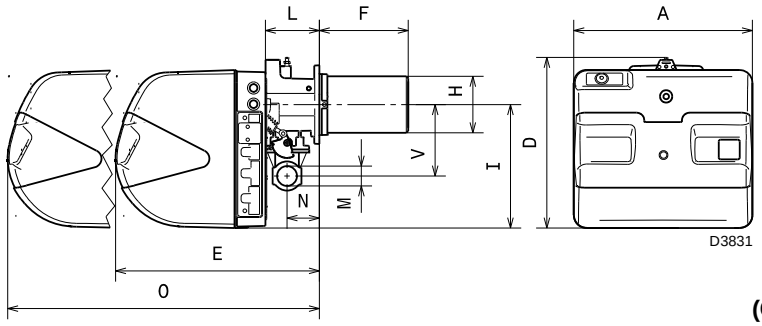

(C)

mm	A	D	E	F (1)	H	I	L	O	N	V	M
RS 34/1 MZ	442	422	508	216-351	140	305	138	780	84	177	1”1/2
RS 44/1 MZ	442	422	508	216-351	152	305	138	780	84	177	1”1/2

燃烧器描述 (A)

1 燃烧头
2 点火电极
3 用于燃烧头调节的螺钉
4 套管
5 最小风压开关
(不同的运行方式)
6 火焰探针
7 风压测试点
8 燃气压力测试点及用于固定燃烧头的螺钉
9 固定风机到套管的螺栓
10 打开燃烧器及检修燃烧头时用的滑杆
11 开度指示器
将风门打开到燃烧器输送所需要的数值 .
12 压力测试点
13 进风口
14 燃气供气管道
15 燃气阀组连接法兰
16 锅炉固定法兰
17 稳焰盘
18 观火孔
19 电机电容 (RS 34/1 MZ)
20 带锁定指示灯及锁定复位按钮的控制盒
21 电缆插头
22 风门挡板
23 电离子探针电缆的插接口

注意：
如果控制盒 20)(A) 的报警指示灯亮（红色），表明燃烧器处于锁定状态。
按下按钮，保持 1 至 3 秒，使其复位。

包装 - 重量 (B) - 大概值

- 燃烧器放置在纸盒内运输，最大尺寸见表格 (B)。
- 燃烧器与包装的总重量见表格 (B)。

最大尺寸 (C) - 大概值

燃烧器最大尺寸见表格 (C)。
另外说明，为了检修燃烧器，燃烧器必须拉出来，安装时要考虑这部分距离。
燃烧器不带机盖并打开的尺寸见 H 栏。

标准配置

1 - 燃气阀组法兰
1 - 法兰垫圈
4 - 法兰固定螺栓 M 8 x 25
4 - 将燃烧器法兰固定于锅炉上的螺栓：M 8 x 25
1 - 隔热垫
3 - 电气接线插头
1 - 使用说明书
1 - 备件清单

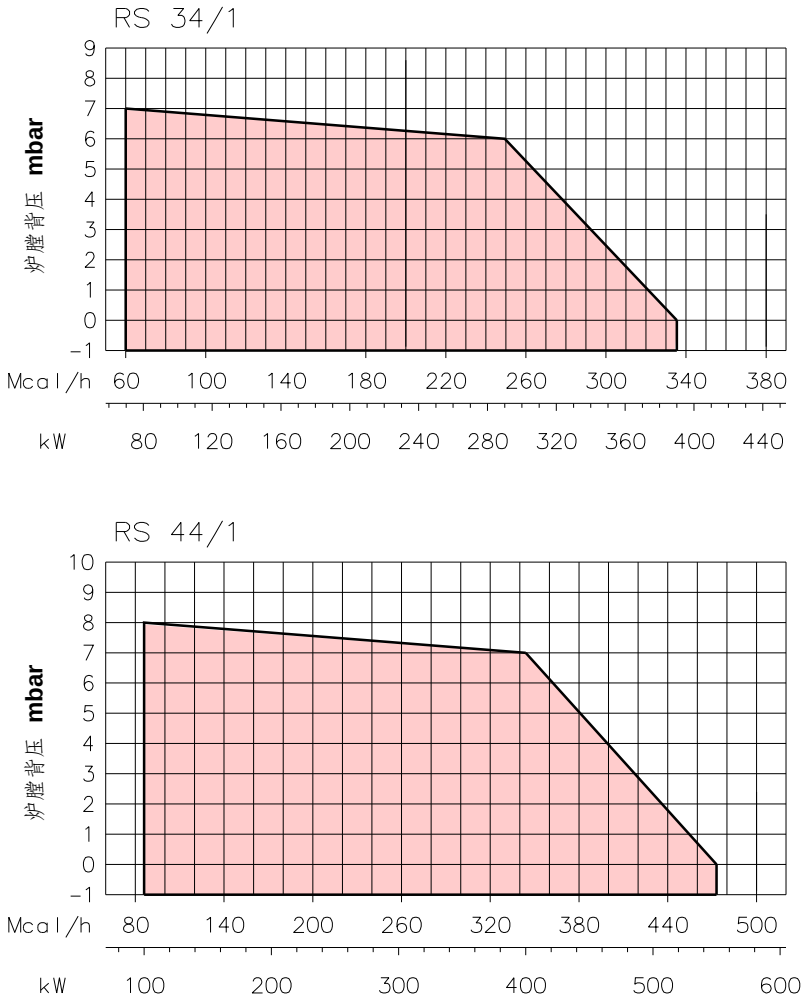

(A) D8589

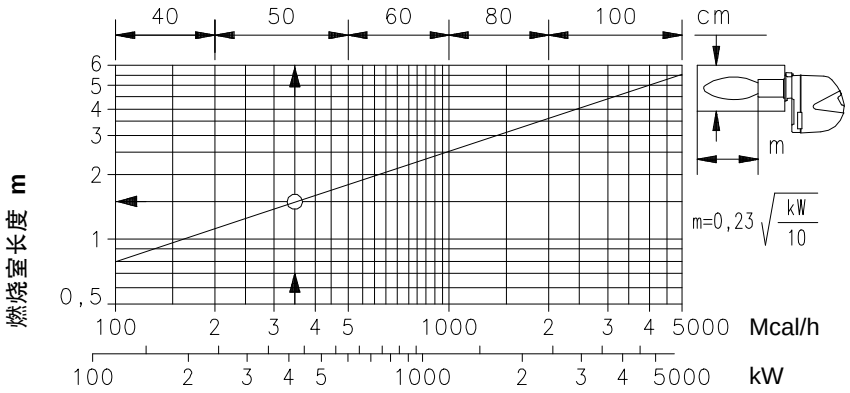

(B) D497

出力图 (A)
燃烧器的出力大小必须在左图显示的区域范围内。

注意
出力图的值在如下条件下测得：环境温度 20°C, 大气压力 1013 mbar (海拔大约 0m)，燃烧头设置如 9 页图示。

测试锅炉 (B)
根据 EN 676 规定，出力图依据特定测试锅炉设定。图表 (B) 显示了测试锅炉燃烧室的直径及长度。
.

例如 : 出力 350 Mcal/h：
直径 = 50 cm - 长度 1.5 m。

商用锅炉
如果锅炉符合 CE 标准且其炉膛尺寸基本符合表（ B ）所列值，那么燃烧器 / 锅炉的匹配不会出现什么问题。
如果燃烧器需要使用在没有 CE 认可的锅炉或 / 和炉膛尺寸明显小于表（ B ）所列之值，应该先咨询燃烧器生产厂商。

RS 34/1 MZ 一段火燃气阀组 Δp (mbar)

kW	1	2					
		MBC-DLE-120 (Rp 3/4")	MB 407 S2 (Rp 3/4")	MB 410 S2 (Rp 1.1/4")	MB 412 S2 (Rp 1.1/4")	MB 415 S2 (Rp 1.1/2")	MB 420 S2 (Rp 2")
70	0,6	5,2	3,0	--	--	--	--
75	0,6	5,6	3,4	2,1	--	--	--
100	1,0	8,2	5,6	2,9	--	--	--
125	1,4	11,1	8,0	4,2	2,1	--	--
150	2,4	15,7	11,0	5,6	2,8	--	--
175	3,5	21,1	14,4	7,2	3,6	--	--
200	4,6	27,2	18,1	9,0	4,5	--	--
225	5,8	33,9	22,1	11,0	5,5	3,2	--
250	6,9	41,3	26,4	13,2	6,5	3,3	--
275	8,0	49,4	31,3	15,5	7,6	3,8	--
300	9,1	58,0	36,6	18,0	8,7	4,3	--
325	10,2	67,2	42,2	20,5	9,9	4,8	3,2
350	11,3	76,7	47,8	22,9	11,2	5,4	3,4
375	12,4	86,7	53,7	25,4	12,7	5,9	3,8
390	13,1		57,4	27,0	13,5	6,3	4,0

RS 44/1 MZ 一段火燃气阀组 Δp (mbar)

kW	1	2				
		MB 407 S5 (Rp 3/4")	MB 410 S5 (Rp 1.1/4")	MB 412 S2 (Rp 1.1/4")	MB 415 S2 (Rp 1.1/2")	MB 420 S2 (Rp 2")
100	0,2	5,6	2,9	2,1	3,2	3,2
150	1,6	11,0	5,6	2,8	3,2	3,2
200	3,0	18,1	9,0	4,5	3,2	3,2
250	4,9	26,4	13,2	6,5	3,3	3,2
300	6,9	36,6	18,0	8,7	4,3	3,2
350	8,9	47,8	22,9	11,2	5,4	3,4
400	10,8	59,9	28,1	14,0	6,5	4,1
450	12,8	73,2	33,6	16,8	7,7	4,9
500	14,7	87,6	39,5	19,8	9,0	5,7
550	16,7	103,0	45,8	23,1	10,2	6,6

RS 34/1 MZ 二段火燃气阀组 Δp (mbar)

kW	1	2				
		MB-ZR 407 S2 (Rp 3/4")	MB-ZR 410 S2 (Rp 1")	MB-ZR 412 S2 (Rp 1.1/4")	MB-ZR 415 S2 (Rp 1.1/2")	MB-ZR 420 S2 (Rp 2")
70	0,6	3,0	2,1	2,1	--	--
75	0,6	3,4	2,1	2,1	--	--
100	1,0	5,6	2,9	2,1	--	--
125	1,4	8,0	4,2	2,1	--	--
150	2,4	11,0	5,6	2,8	--	--
175	3,5	14,4	7,2	3,6	--	--
200	4,6	18,1	9,0	4,5	--	--
225	5,8	22,1	11,0	5,5	3,2	--
250	6,9	26,4	13,2	6,5	3,3	--
275	8,0	31,3	15,5	7,6	3,8	--
300	9,1	36,6	18,0	8,7	4,3	--
325	10,2	42,2	20,5	9,9	4,8	3,2
350	11,3	47,8	22,9	11,2	5,4	3,4
375	12,4	53,7	25,4	12,7	5,9	3,8
390	13,1	57,4	27,0	13,5	6,3	4,0

(A)

燃气压力

左表列出燃烧器运行在最大出力时燃气管道上的最小压力损失。

列 1

燃烧头处的压力损失

测点第 7 页 1)(B) 处燃气压力，参考条件：炉膛背压为 0 mbar。

列 2

第 7 页 2)(B) 燃气阀组 的压力损失，包括：1 段火或 2 段火调节阀 VR，安全阀 VS (两个全开)，调压器 R，过滤器 F。

表中所列之值是根据使用天然气 G 20（ PCI 9. 45 kWh/Nm^3 (8. 2Mcal/Nm^3) ）所得。对于天然气 G 25（ PCI 8. 13 kWh/Nm^3 (7. 0 Mcal/Nm^3) ）

表中之值乘以一个系数：

- 列 1：乘 1. 5 ；
- 列 2：乘 1. 35。

计算 燃烧器的最大出力大概值，按如下方法：

- 将第7页1 ）（ B ）测试点测得的燃气压力减去炉膛背压值。
- 从相关的图表中1列的数据中找出最接近上一步计算结果的数值。
- 读取左边对应值。

例 - RS 34/1/M MZ:

最大出力运行

- 天然气 G20（ PCI 9.45kwh/m^3 ）
- 第 7 页 1)(B)
  测试点的燃气压力 = 8.9 mbar
- 炉膛背压 = 2 mbar
  8.9 - 2 = 6.9 mbar

在 RS 34/1 MZ 的表中压力 6. 9 mbar (列 1) 对应的出力为 250 kW。

这个值只能作为参考；精确的出力值要根据燃气计量表测量。

.计算 燃烧器在最大出力时第 7 页测点 1)(B) 的燃气压力：

- 在相应的燃烧器表中找到最接近的出力值。
- 读取列 1 的读数。
- 再加上炉膛背压值。

例 - RS 34/1 MZ:

- 燃烧器需求出力： 250 kW
- 天然气 G 20（ PCI 9.45 kWh/Sm^3 ）
- 出力为 250 kW 时 , 表格
  RS 34/1 MZ, 列 1 读数 = 6.9 mbar
- 炉膛背压 = 2 mbar
  6.9 + 2 = 8.9 mbar

即为第 7 页测试点 1)(B) 的燃气压力

RS 44/1 MZ 二段火燃气阀组 Δp (mbar)

kW	1	2			
		MB-ZR 410 S2 (Rp 1")	MB-ZR 412 S2 (Rp 1.1/4")	MB-ZR 415 S2 (Rp 1.1/2")	MB-ZR 420 S2 (Rp 2")
100	0,2	2,9	2,1	--	--
150	1,6	5,6	2,8	--	--
200	3,0	9,0	4,5	3,2	--
250	4,9	13,2	6,5	3,3	--
300	6,9	18,0	8,7	4,3	3,2
350	8,9	22,9	11,2	5,4	3,4
400	10,8	28,1	14,0	6,5	4,1
450	12,8	33,6	16,8	7,7	4,9
500	14,7	39,5	19,8	9,0	5,7
550	16,7	45,8	23,1	10,2	6,6

(A)

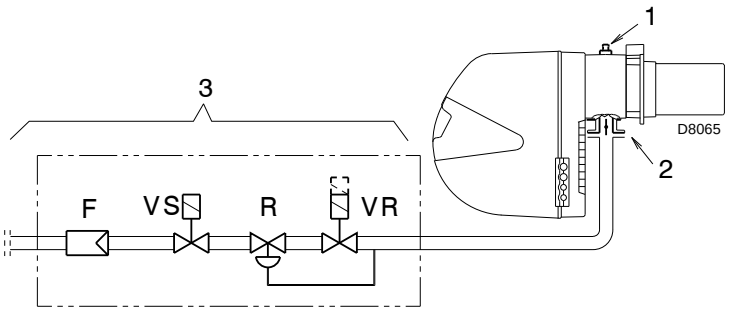

(B)

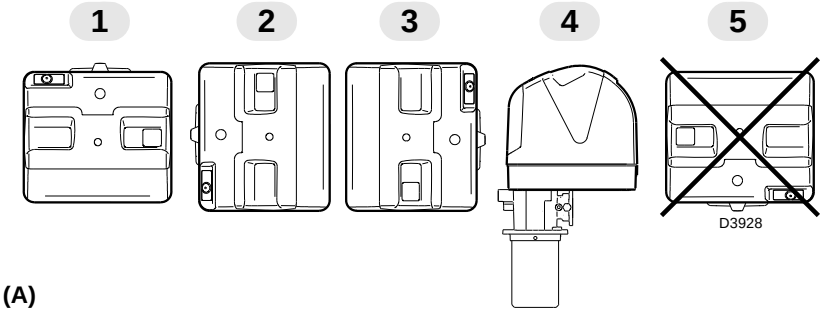

(A)

mm	A	B	C
RS 34/1 MZ	160	224	M8
RS 44/1 MZ	160	224	M8

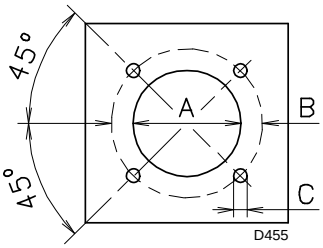

(B)

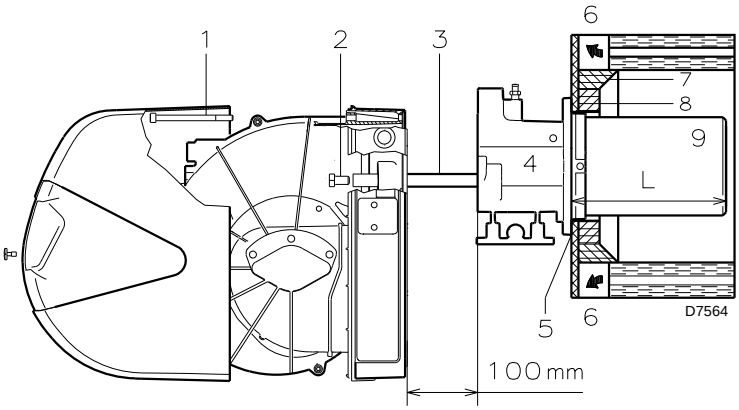

(C)

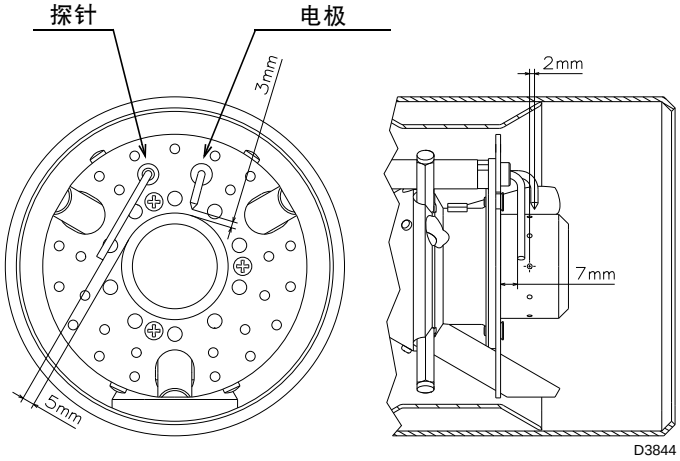

(D)

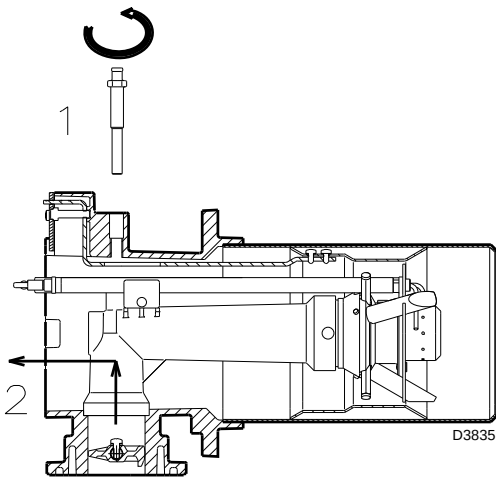

(E)

安装

⚠ **燃烧器的安装必须遵循当地法规和相关标准！**

工作位置 (A)

⚠ 燃烧器被设计成只能在位置 **1**, **2**, **3** 和 **4** 位置点工作。

安装位置 **1** 是最好的，这是可以按照操作手册来检修的唯一位置。安装位置 **2**, **3** 和 **4** 也可以正常工作，但是对于维修和燃烧头的检查等比较困难，见 15 页说明。

⛔ 其他安装位置也可以正常工作。但是从安全角度考虑，位置 **5** 是被禁止的。

锅炉固定板 (B)

如图（ B ）所示在锅炉板上钻孔。孔的位置可以用随然烧器一起提供的隔热垫来标记划线。

燃烧头长度 (C)

燃烧头的长度选择应按照锅炉厂商提供的说明书来选取，任何情况下，燃烧头的长度必须大于锅炉前炉墙和炉衬的总厚度。
燃烧头的长度 L (mm) 如下所示：

燃烧头长度 9)	RS 34/1 MZ	RS 44/1 MZ
• 标准	216	216
• 加长	351	351

对于带前烟箱 6) 或反转火焰的锅炉，必须在锅炉炉衬 7 ）和燃烧头 9 ）之间安装用保温材料制作的防护衬 8 ）。防护衬的安装不能妨碍燃烧头的移动。
对于带有前水冷壁的锅炉，除非锅炉厂商特别要求，否则防护衬 7)-8)(C) 是不需要的。

固定燃烧器到锅炉上 (C)

安装燃烧器到锅炉上之前，检查（ 从燃烧头的开口处 ）火焰探针和点火电极的位置是否正确，如图 (D) 所示。

从燃烧器上分开燃烧头，如图 (C)：
- 从两根滑杆 3 ）上拆下螺栓 2 ）；
- 拆下螺栓 1) 并将燃烧器在滑杆 3 ）上拉出约 100 mm ；
- 断开火焰探针和点火电极的电缆，然后完全将燃烧器拉出。将单元 4 ）（ C ）固定到锅炉炉门上，插入隔热垫 5 ）（ C ）。用 4 颗螺栓固定，燃烧器和锅炉之间必须密封。

若前面的检测中发现探针或者电极的位置不正确，拆除螺杆 1)(E)，抽出燃烧头的内部部件 2)(E) 进行调整。

不要转动探针的角度，保持如图（ D ）所示位置。如果探针太靠近电极，有可能损坏控制盒。

⚠ **注意**
重新装配燃烧头内部组件 2)(E) 时，螺栓 1)(E) 的紧力应该在 **4** ～ **6 Nm** 之间。

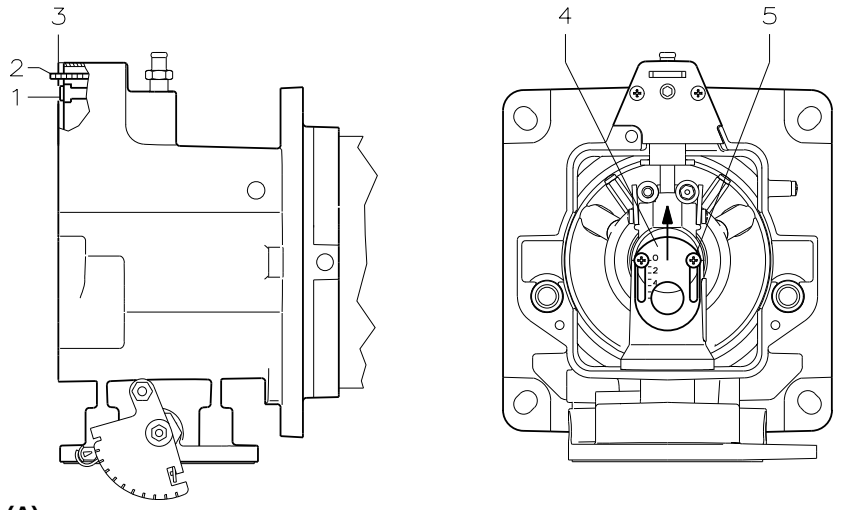

(A)

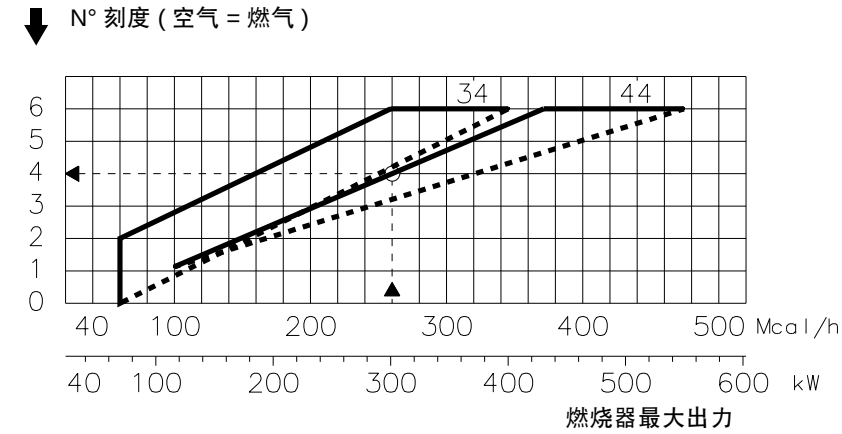

(B)

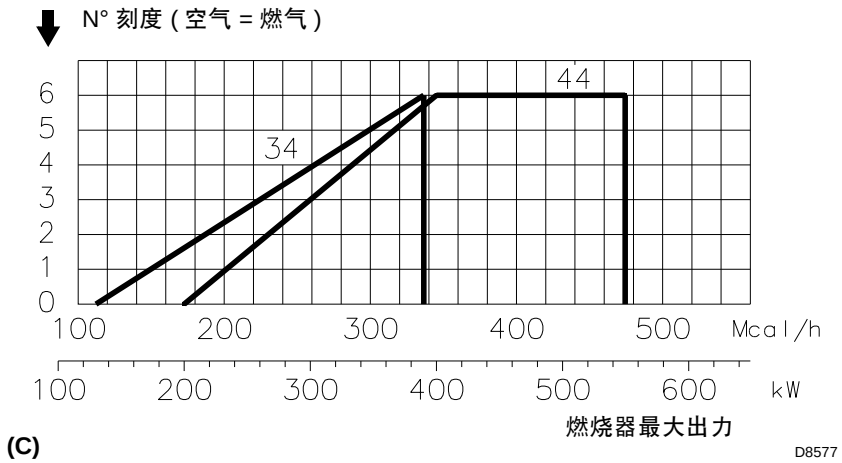

(C)

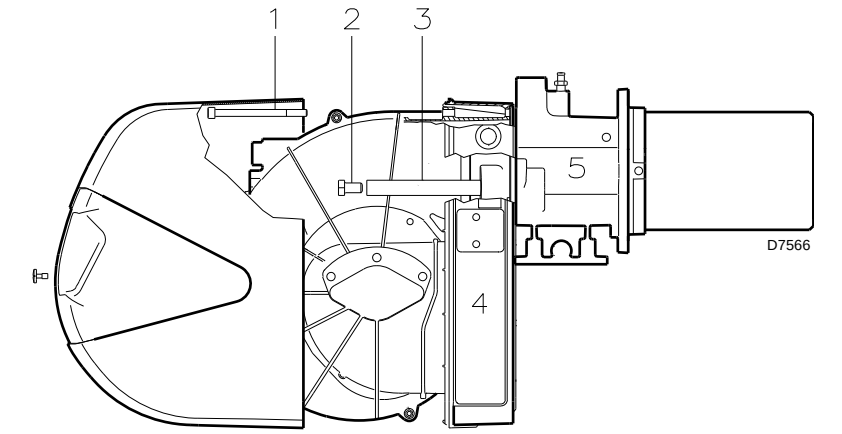

(D)

燃烧头的设置

安装工作进行到这一步，燃烧头和套管已经安装到锅炉上，如图 (A) 所示。接下来调整燃烧头比较容易。

空气调节 (A - B)

旋转螺栓 1)(A) 直到指示杆 2)(A) 上的刻槽与面板 3 ）(A) 的表面对齐。

例：

RS 44/1 MZ 燃烧器，出力 = 300kW.
如图 (B) 所示，对于最大出力 300 kW，空气应该调节到刻度 4。

注意：

如果炉膛背压为 0 mbar，空气的调节按图 (B) 中的虚线所示来调节。

中心风调节 (A - C)

在需要精确调试的应用中，可能需要按照图（ C ）刻度指示通过调节环 4)(A) 来调节中心空气量。
调节时，松开螺栓 5)(A) 然后抬起环 4)(A)。最后拧紧螺栓 5)(A)。

一旦完成头部的调整，将燃烧器 4)(D) 重新装回到滑杆 3)(D) ，在燃烧器距燃气管连接器 5)(D) 100㎜ 处 （ 燃烧器处于 第 8 页图 (C) 所示位置 ），连接好火焰探针和电极的电缆，然后完全关闭燃烧器，燃烧器处于图 (D) 所示位置。
在滑杆 3 ）上装回螺栓 2)。

用螺栓 1 ）固定燃烧器。

重要

安装好燃烧器后，建议轻轻的拉出火焰探针和点火电极的电缆，直到它们被轻轻拉紧。

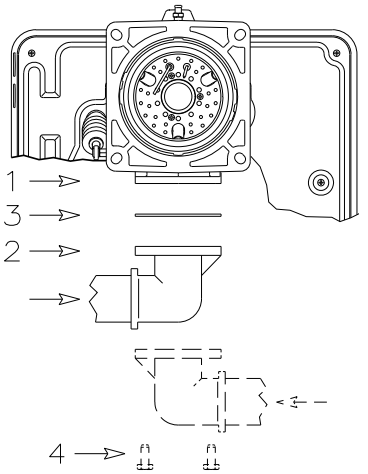

(A) D3839

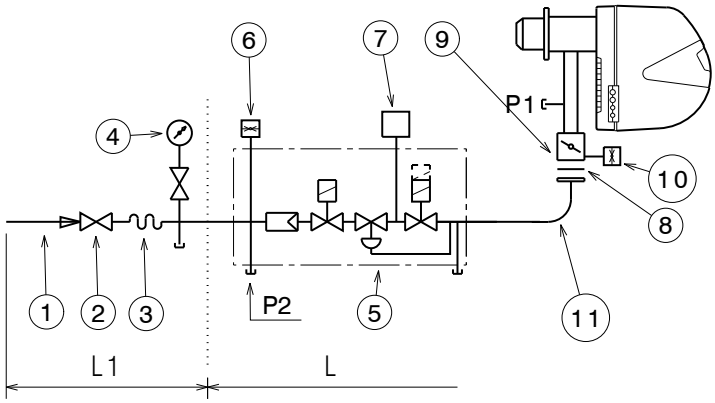

(B) D8066

燃烧器和有关燃气阀组，符合 EN 676 标准

燃气阀组 (一段火)				燃烧器		7	9
代码	型号	Ø	C.T.	RS 34/1	RS 44/1	代码	代码
3970602	MBC 120	3/4”	♣	•	-	-	3000824
3970553 3970229*	MB-DLE 407 S20	3/4”	-	•	-	3010123	3000824
3970599	MB-DLE 407 S52	3/4”	-	-	•	3010123	3000824
3970554 3970230*	MB-DLE 410 S20	1”	-	•	•	3010123	3000824
3970258	MB-DLE 410 S52	1”1/4			•	3010123	3000824
3970144 3970231*	MB-DLE 412 S20	1”1/4	-	•	•	3010123	-
3970180 3970232*	MB-DLE 415 S20	1”1/2	-	•	•	3010123	-
3970181 3970233* 3970182 3970234*	MB-DLE 420 S20	2”	- - ♦ ♦	•	•	3010123 3010123 - -	3000822

燃气阀组 L (二段火)				燃烧器		7	9
代码	型号	Ø	C.T.	RS 34/1	RS 44/1	代码	代码
3970046	MB-ZRDLE 407 S20	3/4”	-	•	-	3010123	3000824
3970079	MB-ZRDLE 410 S20	1”	-	•	•	3010123	3000824
3970152	MB-ZRDLE 412 S20	1”1/4	-	•	•	3010123	-
3970183	MB-ZRDLE 415 S20	1”1/2	-	•	•	3010123	-
3970184 3970185	MB-ZRDLE 420 S20	2”	- ♦	• •	• •	3010123 -	- 3000822

*** 连接燃烧器配有 6 针插头的阀组 .**

**** 按 21 页接线图，用随燃烧器提供那个接头替换 6 针插头。**

(C)

燃气供气管路

- 用随燃烧器供应的法兰2)，法兰垫3)和螺栓 4)将燃气阀组连接到燃气接口 1)(A) 上。
- 根据需要，燃气阀组可以从燃烧器的左右两边连接，如图 (A)。为了确保燃气在 3 秒钟的安全时间里能够到达燃烧头，燃气电磁阀应该尽可能的靠近燃烧器。

燃气阀组 (B)

燃气阀组符合 EN 676 标准，与燃烧器分别提供，订货代码由表 (C) 给出。表 (C) 的一段火燃气阀组的功率最大可以到 550 kW，只需要根据标准限制点火出力，详见 12 页。

图例 (B)

1 －燃气供气管
2 －手动阀
3 －减振接头
4 －带按压开关的压力表
5 - 整体阀，包括：
  - 过滤器 (可更换)
  - 一段或二段工作阀
  - 调压器
6 －最小燃气压力开关
7 －燃气泄漏检测装置
  根据 EN 676 标准要求，对于最大出力大于1200KW的燃烧器必须配置燃气阀组泄漏检测装置。
8 －法兰垫
9 - 燃气阀组 / 燃烧器适配器

P1- 燃烧头处的燃气压力
P2- 调节阀前的燃气压力

L - 单独提供的燃气阀组，代码见表 (C)
L1 - 由安装方负责

表 (C) 图例

C. T. =燃气阀组泄漏检测装置：
- = 燃气阀组不带燃气泄漏检测装置；但是可以单独定购以后装配 (代码见列 7)。
♦= 燃气阀组已经装配燃气泄漏检测装置。
♣= 该阀组，集成泄漏检测装置不可使用

7 = VPS 燃气阀组泄漏检测装置。根据需要与燃气阀组分别提供。
9 = 燃气阀组 / 燃烧器适配器。
根据需要与燃气阀组分别提供。

注意

调节燃气阀组，请参考相关阀组使用手册。

最小燃气压力开关

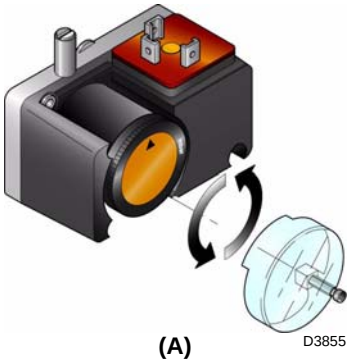

(A)

风压开关

(B)

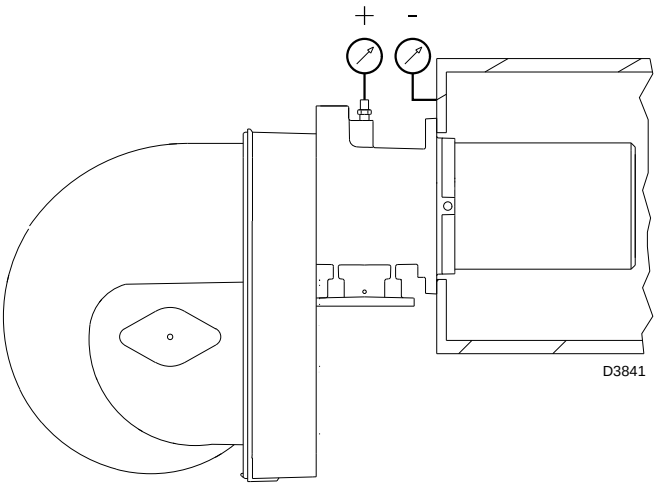

(C)

初次点火前调整

⚠ **警　告**

第一次点火必须由有资质人员利用专用工具来完成。

燃烧头的调整，空气的调整已经在第 10 页介绍。

另外，下面的这些调整也必须完成：

- 打开燃气阀组前的手动阀；
- 调节最小燃气压力开关至刻度 (A) 起始处；
- 调节风压开关至刻度 (B) 起始处；
- 排尽燃气管路中的空气；
  连续排放空气 (建议用一根软管接到室外排放) 直到闻到燃气的味道。
- 在燃烧头燃气压力测点处安装一个压力表如图 (C) 所示。
  压力表的读数可以用来计算燃烧器的最大出力的大概值，如第 7、 8 页的描述。
- 连接两个灯泡或万用表到两个电磁阀 VR 和 VS 上，用以检查何时给电磁阀供电。
  如果两个电磁阀均配置了指示灯显示何时通过电流，那么这一步就不必要了。
- 风门挡板：保持工厂的设定不变。

启动燃烧器前，最好是先调整燃气阀组以便燃烧器能在最安全的情况下点火，例如，使燃气流量最小。

启动燃烧器

闭合控制开关。

燃烧器一启动，通过第 4 页 18)(A) 观火孔观察风机叶片转向。

通过连接的灯泡或万用表或燃气阀组自带的指示灯来确认此时电磁阀没有得电，如果电磁阀得电了，应立即停止燃烧器并检查电气接线。

燃烧器点火

完成了前面的这些检查后，燃烧器将成功点火。如果马达转动而火焰并没有出现，并且控制盒锁定，复位并等待下一次点火尝试。如果点火还是不成功，有可能是因为燃气没有在 3 秒钟的安全时间里到达燃烧头。这种情况下，可以适当增加点火燃气量。燃气是否到达燃烧头可以通过图 (C)所示连接的压力表来确认。一旦点火成功，即可进行全面校准工作。

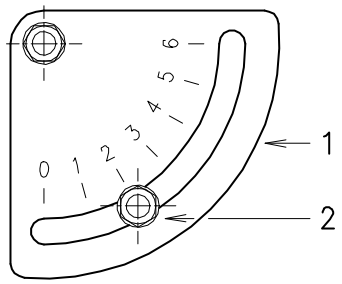

(A) D593

燃烧器校准

燃烧器的最佳校准需要在排烟口使用烟气分析仪进行烟气分析。

按如下顺序调整：
1 - 最大出力；
2 - 风压开关；
3 - 最小燃气压力开关；

点火出力确定 (最小出力)

燃烧器最大额定出力小于 120 kW
可以在最大额定运行出力下点火。例如：
- 最大运行出力 : 120 kW
- 最大点火出力 : 120 kW

燃烧器最大额定出力大于 120 kW
点火时的出力必须小于最大运行出力。
如果点火出力不超过 120 kW，无需调整。
如果点火出力超过 120 kW，点火出力根据控制盒的安全时间 “ts”来确定：
"ts" = 3 秒，点火出力必须小于或等于最大运行出力的 1/3 。

例如：
最大运行出力为 450 kW。
如果安全时间 ts = 3 秒，那么点火出力必须等于或小于 150 kW 。

为了测量点火出力：
- 断开火焰探针上的电缆接头24)(A)页4 (燃烧器将点火并在安全时间后锁定)。
- 重复上面的点火 – 锁定 10 次。
- 在燃气表上读出燃气用量。
  该燃气量必须小于或等于按如下公式计算值，如安全时间 ts = 3 秒：

$$Vg = \frac{Qa\ (\text{燃烧器点火出力})\ \mathbf{x\ n\ x\ ts}}{3600}$$

Vg: 点火燃气流量 (Sm^3)
Qa: 点火出力 (Sm^3/h)
n: 点火次数 (10 次)
ts: 安全时间 (秒)

例 ：燃气 G 20 (9.45 kWh/Sm^3)：
点火出力为 150 kW
相当于 15. 87 Sm^3/h。
10次点火后锁定，燃气表上的燃气量应该小于或等于：

$$Vg = \frac{15{,}87 \times 10 \times 3}{3600} = 0{,}132\ Sm^3$$

1 - 最大出力

燃烧器最大出力的设定必须在第 5 页所示的负荷图范围内。

调整燃气量
通过燃气流量表测量燃气量。
按常规，也可以参照第 6 页的表格，只需要读出图 (C)（ 第 11 页 ）的压力表读数，按照第 6、 7 页的指示操作即可。
- 如果需要减少燃气量，降低出口燃气压力。如果压力已经很低，则稍微关闭调节阀 VR2。
- 如果需要增加燃气量，加大出气口燃气压力。

调节风量
松开螺栓 2 （ A ），然后利用液压装置 1)(A) 调整风门挡板。

风压开关（ 第 4 页 4)(A) ）

(A)

最小燃气压力开关

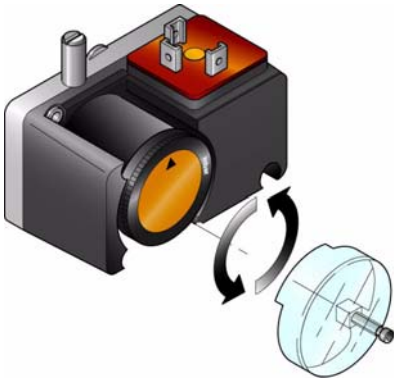

(B)

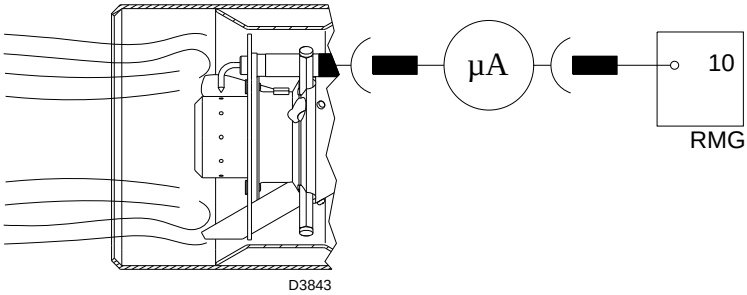

(C)

注意

一旦调整好最大出力，再次检查点火：点火阶段的噪音必须和正常运行阶段的噪音接近。如有异常噪音，可以适当减少点火出力。

2 - 风压开关 (A)

在风压开关设置在量程开始位置 (A) 的前提下完成燃烧器的基本调整后，再来调整风压开关。

使燃烧器运行于最小出力状态，插入烟气分析仪，慢慢的关小风机进风口（ 可以用一块硬纸板 ）直到 CO 含量不超过 100 ppm。然后顺时针转动旋钮，直到燃烧器到达锁定位置。检查刻度盘 (A) 上向上的那个箭头指示的值。逆时针方向慢慢旋转旋钮直到这个值与刻度盘 (A) 上那个向下的箭头对齐，这就包含了压力开关动作滞后的量 (两个箭头之间兰底白色标记显示的区域)。

现在检查燃烧器能否正常启动：

如果燃烧器再次锁定，再逆时针慢慢的旋转旋钮一点点。

3 - 最小燃气压力开关 (B)

使燃烧器运行在最大出力，慢慢的顺时针方向旋转旋钮增大设定压力直到燃烧器锁定。然后逆时针方向旋转旋钮减小大约 5mbar，重新启动燃烧器检查是否能正常运行。

如果燃烧器再次锁定，逆时针方向再减小 1mbar。

火焰监测 (C)

燃烧器配置了离子火焰检测系统确保火焰存在。控制盒能检测到的最小电流是 5 µA。燃烧器能提供的电流要大得多，所以这部分不需要调整。如果要测量离子探针电流，断开离子探针的连接电缆接头 （第 4 页 23)(A) ）接入一个量程为 100 µA 的直流电流表。注意正负极性。

正常点火
(n° = 从 0 秒开始后的秒数)

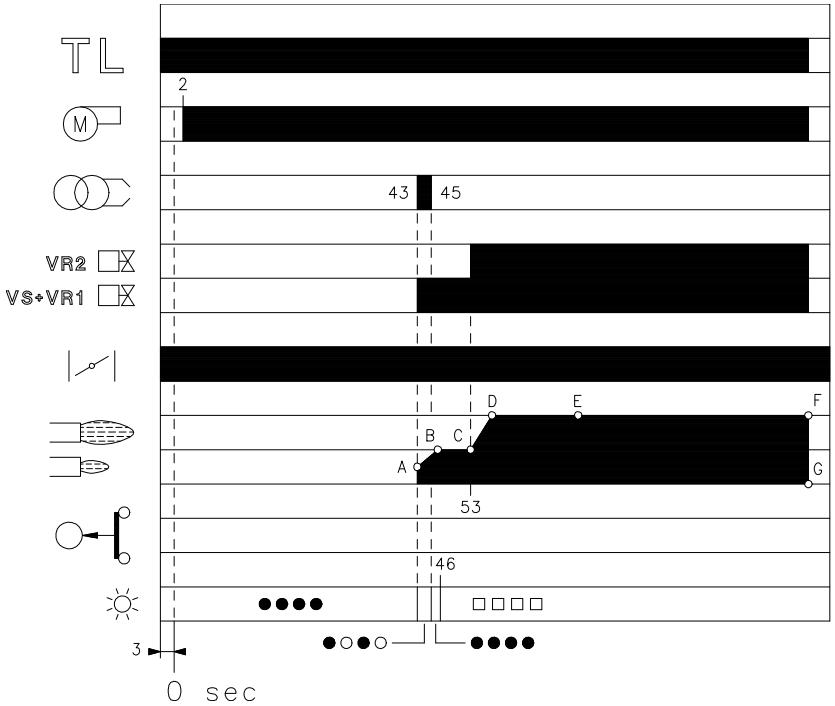

* ○ 不亮　● 黄色　□ 绿色　▲ 红色
更多细节见 16 页 .

(A)　D3024

点火失败

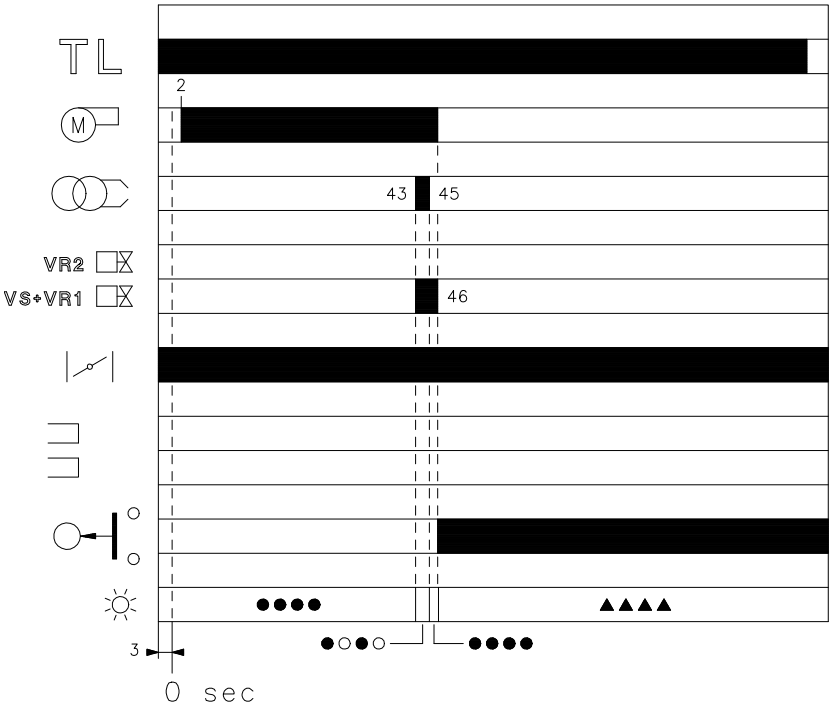

* ○ 不亮　● 黄色　▲ 红色
更多细节见 16 页 .

(B)　D3025

燃烧器运行

燃烧器启动 (A)

- 控制装置 TL 闭合
  大概 3 秒钟后：
- 0 s ：控制盒启动循环开始
- 2 s ：风机电机启动。
  风门打开到最大出力位置。
  然后是预吹扫阶段。
- 43 s ：点火电极打火花。
- 安全阀VS及调节阀VR的一段火阀 VR1 打开。阀门 VR1 开始快速打开，在较小出力下点火，点 A 所示。然后调节阀 VR 慢慢开到最小出力位置，燃气流量也慢慢平缓的增加，A-B 部分。
- 45 s ：点火电极熄灭。
- 53 s ：阀门 VR 的二段火阀门 VR2 打开，出力从一段火缓慢升至最大出力，C-D 部分所示。
- 控制阀盒的启动循环结束。

稳定运行阶段 (A)

启动循环的最后阶段，控制盒持续检查火焰是否存在，并检查风压开关是否处于正确位置。

燃烧器以恒定的出力运行。
如果锅炉中的温度或压力持续上升且断开控制开关 TL，燃烧器会停止运行，F-G 部分。

点火失败 (B)

如果燃烧器点不着火，它将在燃气电磁阀打开后 3 秒钟之内或控制装置 TL 闭合后 49 秒钟之内进入锁定状态。
控制盒的红色 LED 灯亮。

燃烧器运行过程中熄火

如果燃烧器在运行过程中意外熄火，燃烧器将在 1 秒钟内锁定。

最终检查 (燃烧器运行中进行)：

- 断开最低燃气压力开关电缆；
- 断开温度 / 压力开关 TL
- 断开温度 / 压力安全开关 TS ；

燃烧器必须停止 .

- 断开风压开关的进风管；
- 断开离子探针的电缆；

燃烧器必须停机并锁定 .

确认各个可调节设备上的锁紧装置已经紧固。

维护

⚠ 燃烧器需要定期维护，维护工作必须由**具有专业技术资质并经由当地相关部门认证的专业人员执行**。

⚠ 定期维护对确保燃烧器的可靠性至关重要，避免燃气过多消耗及过多污染。

⚠ 进行任何清洁或维护前，要断开系统的总电源开关。

燃烧

要实现燃烧器的最佳校准，需要对烟气进行分析。维护过程中如果发现有数据与以前测得的数据有较大差别，就需要多加注意。

燃气泄露

确保在燃气表与燃烧器间的管路上没有燃气泄露。

燃气过滤

过滤器脏了就需要更换 (参考燃气阀组手册)。

燃烧头

打开燃烧器检查燃烧头的各个部分完好无损。没有高温变形，没有脏，位置正确，如果不能确定，可以拆下肘型弯管检查。

燃烧器

检查控制风门挡板和燃气蝶阀的机构是否存在过度磨损或松动的情况。另外确保燃烧器电缆的插接头紧固。
清理燃烧器外表面。

燃烧

如果在运行的开始阶段燃烧不能满足当地强制标准，或者在任意出力下燃烧效果不好，就需要调整燃烧器。
用卡片记录燃烧的各项数据；这些数据对今后的维护有参考作用。

燃烧器启动程序诊断

启动过程中，指示灯的指示意义解释如下：

颜色代码表	
顺序	**颜色代码**
预吹扫	●●●●●●●●●
点火阶段	●○●○●○●○●
运行火焰正常	□□□□□□□□□
弱火焰信号运行	□○□○□○□○□
电压低于 ~170V	●▲●▲●▲●▲●
锁定	▲▲▲▲▲▲▲▲▲
外部光线	▲□▲□▲□▲□▲
图例： ○ 不亮 ● 黄色 □ 绿色 ▲ 红色	

控制盒复位和使用诊断功能

控制盒提供了诊断功能，因此可以很容易的识别可能存在的故障 (指示方式：**红色 LED 指示信号**)。
要使用此功能，待燃烧器进入安全状态（ 锁定状态 ）后，至少等待 10 秒钟，然后按下复位按钮。
控制盒每隔 3 秒产生一个脉冲闪烁信号。
待观测到闪烁次数，并识别出可能的故障原因后，应按住复位安住复位安钮 1-3 秒钟，进行复位。

红色 LED 指示灯亮 至少等待 10 秒钟	**锁定**	**按复位按钮 超过 3 秒钟**	**LED 闪烁**	**间隔 3 秒钟**	**LED 闪烁**
			● ● ● ● ●		● ● ● ● ●

下面列出控制盒复位和诊断的使用方法。

复位控制盒

控制盒复位，按如下方法操作：
- 按下按钮，保持 1-3 秒钟，
  松开按钮 2 秒钟后，燃烧器重新启动，
  如果燃烧器没有重新启动，必须确保启动温控器处于闭合状态。

可视诊断

可视诊断功能

可以标识导致燃烧器锁定的故障信息。
要进行诊断，按如下步骤操作：
- 红灯亮起（ 燃烧器锁定 ）后，按住复位按钮并保持 3 秒钟。
  黄灯闪烁时松开按钮，这时可以看到红灯闪烁，闪烁的次数代表可能的故障，参考 17 页的故障代码对应表。

软件诊断

要实现燃烧器的实时分析，将燃烧器通过红外线接口连接到一台 个人电脑上，就可以显示燃烧器的工作状态，包括燃烧器工作的时间，锁定的次数和类型，控制盒的序列号等。
从而按照以下步骤进行可视诊断：
- 红灯亮时(燃烧器锁定)，按住复位按钮超过 3 秒钟，黄色灯闪烁，松开按钮 1 秒钟，然后再按住复位按钮超过 3 秒钟，直到看到黄灯再次闪烁。
  松开按钮，红色 LED 等高频闪烁：只有这个时候红外连接才会激活。

操作完成后，需要复位控制盒重新启动燃烧器，方法上面已经介绍。

按住按钮	**控制盒状态**
1 秒 -3 秒	不进入诊断状态，控制盒复位。
按住超过 3 秒	可视诊断： (LED 指示灯每间隔 1 秒闪烁一次)。
进入可视诊断状态后，再按超过 3 秒	软件诊断，需要红外接口和电脑 (可以看到工作时间、故障等)

控制盒上指示灯发出的脉冲闪烁信号指示可能的故障类型，列表于 17 页。

信号	故障	可能的原因	建议的弥补措施
闪烁 2 次 ● ●	预吹扫和安全时间后燃烧器锁定并且没有火焰出现	1 - 燃气阀组过气量太少	增加燃气量
		2 - 两个电磁阀中的一个未打开	更换
		3 - 燃气压力过低	增加调压器的压力
		4 - 点火电极调整不当	调整，见第 8 页图 D
		5 - 由于电缆破损点火电极接地	更换
		6 - 高压电缆有缺陷	更换
		7 - 高压电缆因为高温而变形	更换和保护
		8 - 点火变压器故障	更换
		9 - 阀组或变压器接线错误	检查
		10 - 控制盒故障	更换
		11 - 燃气阀组上游手动阀未开	打开
		12 - 燃气管中有空气	排气
		13 - 阀组没有连接，或线圈故障	检查接线或更换线圈
闪烁 3 次 ● ● ●	燃烧器没有启动就出现锁定	14 - 风压开关处于运行状态	调整或更换
	燃烧器启动，然后锁定停机	- 风压开关由于气压不足而不动作	
		15 - 风压开关调整不正确	调整或更换
		16 - 风压开关气压测试点管道被阻塞	清洁
		17 - 燃烧头调整不正确	调整
		18 - 燃烧器负压过高	风压开关另一管连接到风机进风口
	预吹扫期间锁定	19 - 电机控制接触器故障 (仅 3 相型)	更换
		20 - 电机故障	更换
		21 - 电机锁定 (电机故障)	更换
闪烁 4 次 ● ● ● ●	燃烧器启动，但之后锁闭	22 - 模拟火焰	更换控制盒
	在燃烧器停机时锁闭	23 - 燃烧头的残留火焰或虚假火焰	消除火焰或更换控制盒
闪烁 7 次 ● ● ● ● ● ● ●	燃烧器在出现火焰之后立即锁定	24 - 燃气阀组过气量太少	增加燃气量
		25 - 电离子探针的调整不当	调整见第 8 页图 (D)
		26 - 电离子电流太小（ 小于 5μA)	检查探针位置
		27 - 离子探针接地	拉出或更换电缆
		28 - 燃烧器接地不好	检查接地
		29 - 相线和中线接反	调换
		30 - 火焰探测电路故障	更换控制盒
	燃烧器运行期间出现锁闭	31 - 离子探针或电缆接地	更换磨损部分
闪烁 10 次 ● ● ● ● ● ● ● ● ● ●	燃烧器没有启动，但出现锁定	32 - 接线错误	检查
	燃烧器锁定	33 - 控制盒故障	更换
		34 – 启动温控器线路中出现电磁干扰 35 - 存在电磁干扰	过滤或消除干扰 使用无线电干扰保护套件
无闪烁	燃烧器不启动	36 - 没有电源供应	闭合所有开关 – 检查接线
		37 - 启动温控开关安全温控开关断开	调整或更换
		38 - 保险丝被熔断	更换
		39 - 控制盒故障	更换
		40 - 没有燃气	打开手动阀
		41 - 燃气供气气压不足	联系燃气公司
		42 - 最小燃气压力开关没有闭合	调整或更换
	燃烧器不断重复启动，而不锁定	43 – 燃气供气气压非常接近最低燃气压力开关的设定值，阀门打开之后压力的突然下降造成压力开关临时断开，阀门会立即关闭且燃烧器停机。压力增加，最低燃气压力开关会重新闭合而重复点火过程等等。	降低最小燃气压力开关设定值。更换过滤芯。
	点火脉冲	44 - 头部调整不当	调整见第 9 页
		45 - 点火电极不正确	调整见第 8 页图 (D)
		46 - 风门挡板调整不当，风量太大	调整
		47 - 点火出力太大	减少

正常运行 / 监测到火焰的时间
控制盒有监控燃烧器正常运行的功能 (信号： **LED** 指示灯绿灯长亮)。
要使用这个功能，燃烧器点火后等待十秒钟，按住控制盒的复位按钮保持 3 秒钟。
绿色指示灯开始闪烁，如下图所示 .：

绿色 LED 长亮至少等待 10 秒钟	按下按钮超过 3 秒	信号	间隔 3 秒	信号
		● ● ● ● ● ●		● ● ● ● ● ●

LED 指示灯间隔接近 3 秒闪烁。
闪烁的次数指示从燃气阀组开启后火焰探测监测到火焰的时间，如下图所示：

信号	检测到火焰的时间
闪烁 1 次 ●	0.4 秒
闪烁 2 次 ● ●	0.8 秒
闪烁 6 次 ● ● ● ● ● ●	2.8 秒

每次启动此数值都更新。
读取闪烁次数后，燃烧器需要按一下复位按钮重新启动。
警告
如果结果是大于 2 秒，点火有延迟。
检查燃气阀组的调节，风门挡板的设置和燃烧头的调整。

RMG 控制盒和 PC 机连接的组件编码 3002719。

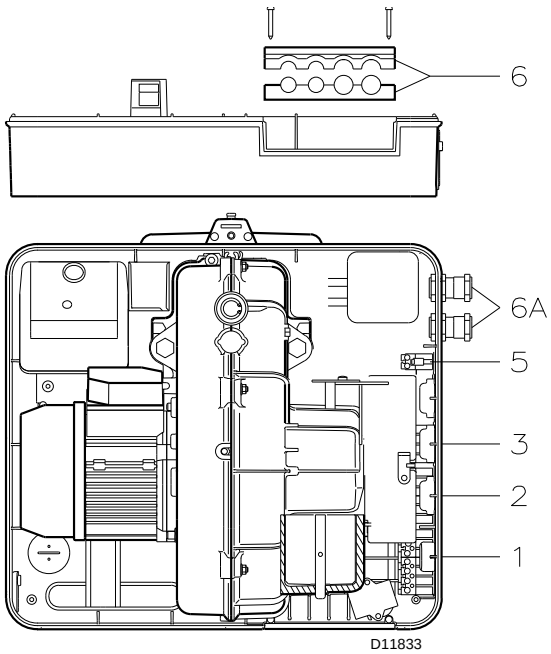

电气连接

注意

电气接线必须由有相关资质的专业人员执行，对于不按图接线或自行改变接线连接而造成的损失，利雅路不负任何责任。

根据 EN 60 335-1 标准要求使用柔性电缆。

所有连接到燃烧器的电缆必须从导缆孔中穿过。

导缆孔可以有不同的用法；下面列出一种：

RS 34-44/1 MZ

1-供温度 / 压力开关 TL 和单相电源的 7- 孔插座。

2- 供燃气阀组，燃气压力开关或检漏设备的 6- 孔插座。

3-供温度 / 压力开关 TR 的 4- 孔插座

5- 供远程复位用的 2- 孔插座

6 - 6A 穿线管用 (捅破它，如果需要使用穿线管 6A)

注意

RS 34-44/1 MZ 燃烧器设计用于间歇运行。这意味着他们必须每隔 24 小时“强制”停机至少一次。以便控制盒可以检验其启动时自身的有效性。正常情况下，锅炉的温度 / 压力开关 TL 能够确保燃烧器停止。如果没有停止，必须串联一个定时开关到 启动回路，保证燃烧器每 24 小时至少停机一次。

注意：
- 不要将电源相线和零线接反了。反接可能导致因点火失败燃烧器锁定。
- 更换配件时只能使用原厂配件。

Electrical panel layout - 电气接线图

1		**INDEX - 目录**
2		Indication of references - 参考指示
3	**RS 34/1 MZ** **RS 44/1 MZ**	Functional layout - 功能布局
4	**RS 34/1 MZ** **RS 44/1 MZ**	Electrical wiring is the responsibility of the installation engineer - 安装方负责的电气接线

2 **Indication of references - 参考指示**

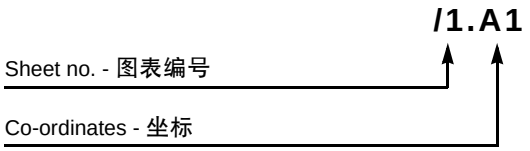

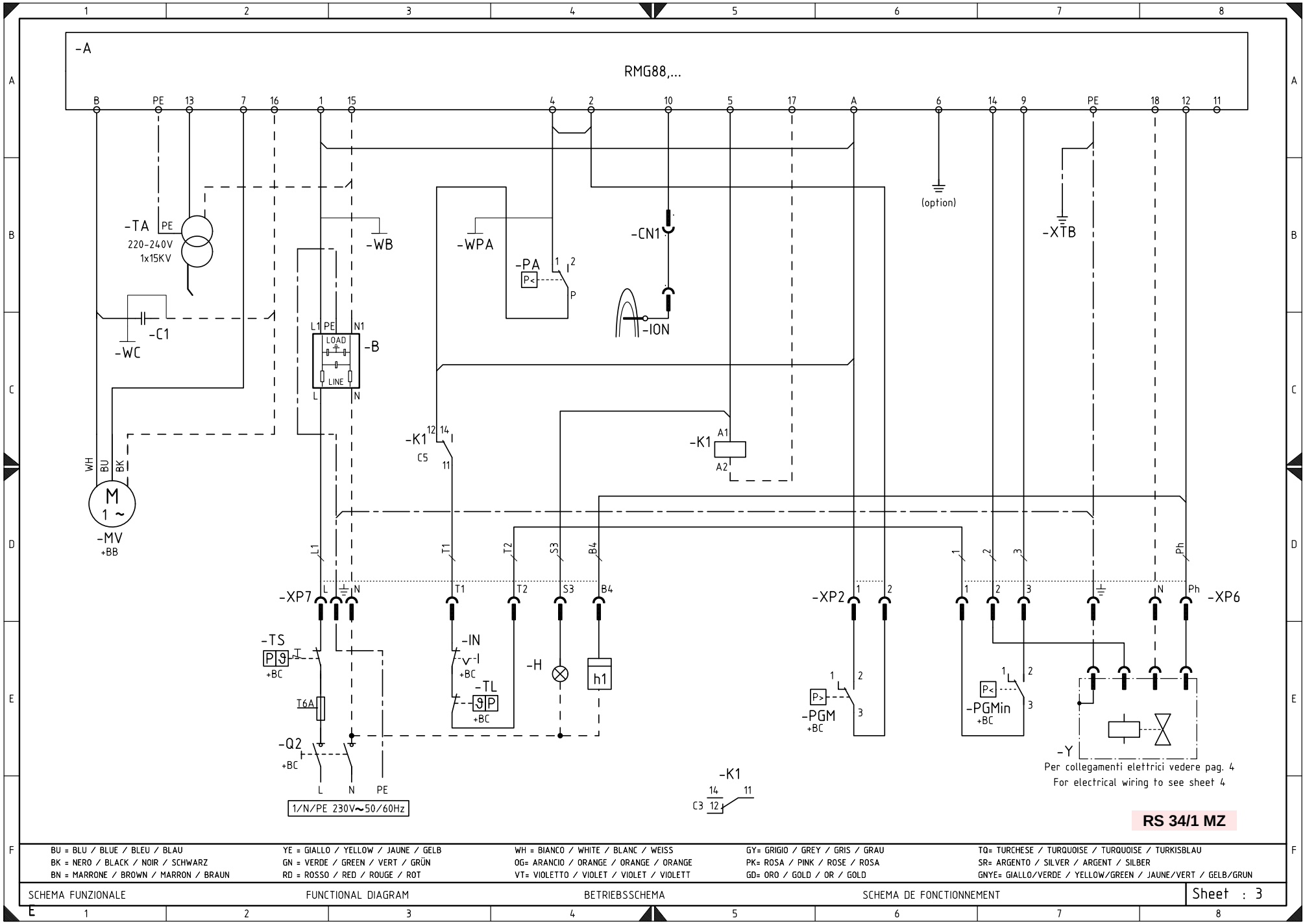
-A
RMG88,...
B PE 13 7 16 1 15 4 2 10 5 17 A 6 14 9 PE 18 12 11
-TA
PE
220-240V
1x15KV
-C1
-WC
-WB
-WPA
-PA
P<
P
-CN1
-ION
(option)
-XTB
L1 PE N1
LOAD
LINE
L N
-B
-K1
12 14
C5
11
-K1
A1
A2
WH BU BK
M
1 ~
-MV
+BB
L1 T1 T2 S3 B4
1 2 3 Ph
-XP7
L N T1 T2 S3 B4
-XP2
1 2
1 2 3 N Ph
-XP6
-TS
P ϑ
+BC
T6A
-Q2
+BC
-IN
+BC
-TL
ϑ P
+BC
-H
h1
P>
-PGM
+BC
P<
-PGMin
+BC
-Y
L N PE
1/N/PE 230V~50/60Hz
-K1
14 11
C3 12
Per collegamenti elettrici vedere pag. 4
For electrical wiring to see sheet 4
RS 34/1 MZ
BU = BLU / BLUE / BLEU / BLAU
BK = NERO / BLACK / NOIR / SCHWARZ
BN = MARRONE / BROWN / MARRON / BRAUN
YE = GIALLO / YELLOW / JAUNE / GELB
GN = VERDE / GREEN / VERT / GRÜN
RD = ROSSO / RED / ROUGE / ROT
WH = BIANCO / WHITE / BLANC / WEISS
OG= ARANCIO / ORANGE / ORANGE / ORANGE
VT= VIOLETTO / VIOLET / VIOLET / VIOLETT
GY= GRIGIO / GREY / GRIS / GRAU
PK= ROSA / PINK / ROSE / ROSA
GD= ORO / GOLD / OR / GOLD
TQ= TURCHESE / TURQUOISE / TURQUOISE / TURKISBLAU
SR= ARGENTO / SILVER / ARGENT / SILBER
GNYE= GIALLO/VERDE / YELLOW/GREEN / JAUNE/VERT / GELB/GRUN
SCHEMA FUNZIONALE
FUNCTIONAL DIAGRAM
BETRIEBSSCHEMA
SCHEMA DE FONCTIONNEMENT
Sheet : 3

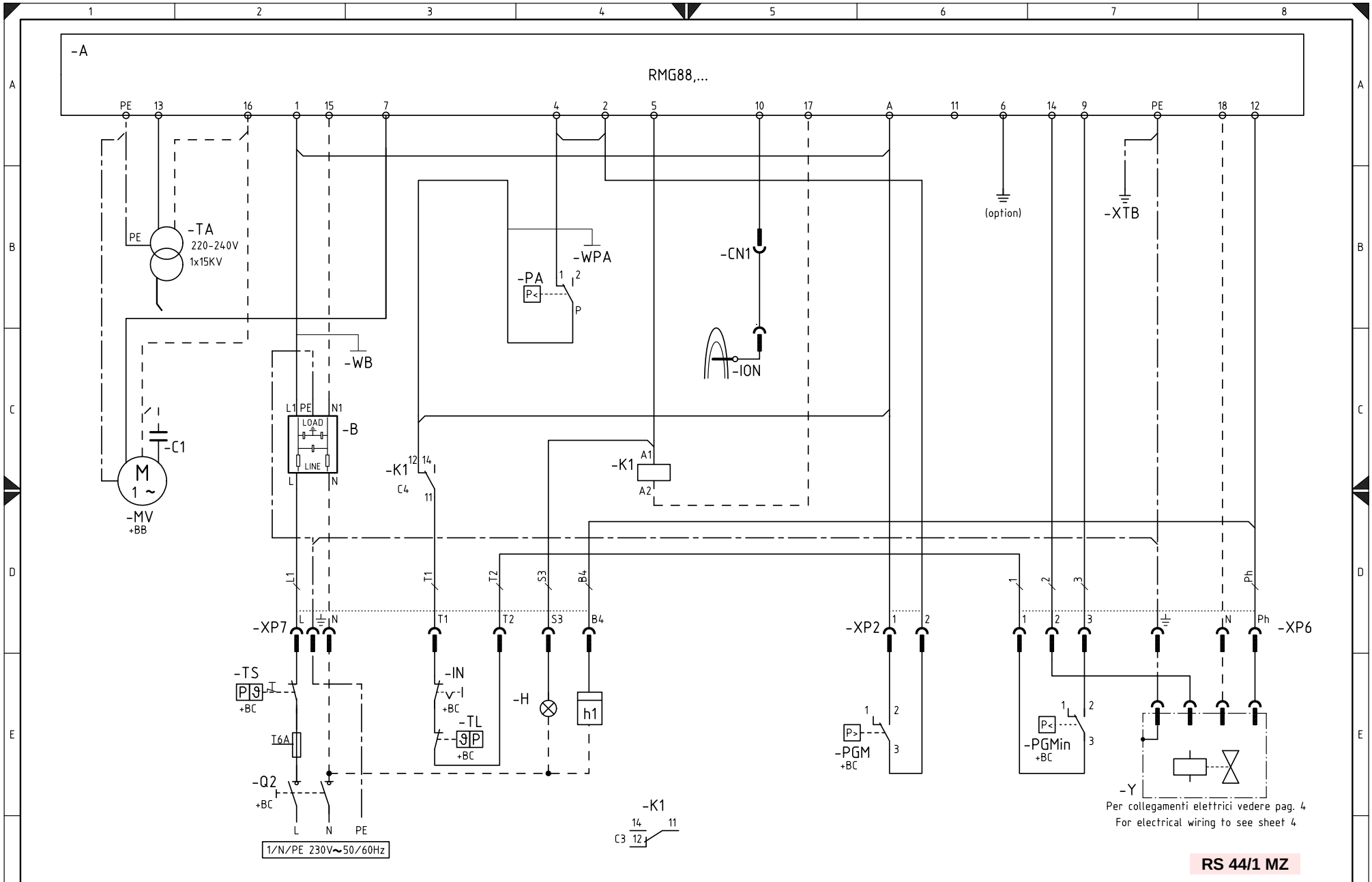

BU = BLU / BLUE / BLEU / BLAU	YE = GIALLO / YELLOW / JAUNE / GELB	WH = BIANCO / WHITE / BLANC / WEISS	GY= GRIGIO / GREY / GRIS / GRAU	TQ= TURCHESE / TURQUOISE / TURQUOISE / TURKISBLAU
BK = NERO / BLACK / NOIR / SCHWARZ	GN = VERDE / GREEN / VERT / GRÜN	OG= ARANCIO / ORANGE / ORANGE / ORANGE	PK= ROSA / PINK / ROSE / ROSA	SR= ARGENTO / SILVER / ARGENT / SILBER
BN = MARRONE / BROWN / MARRON / BRAUN	RD = ROSSO / RED / ROUGE / ROT	VT= VIOLETTO / VIOLET / VIOLET / VIOLETT	GD= ORO / GOLD / OR / GOLD	GNYE= GIALLO/VERDE / YELLOW/GREEN / JAUNE/VERT / GELB/GRUN

SCHEMA FUNZIONALE | FUNCTIONAL DIAGRAM | BETRIEBSSCHEMA | SCHEMA DE FONCTIONNEMENT | Sheet : 3

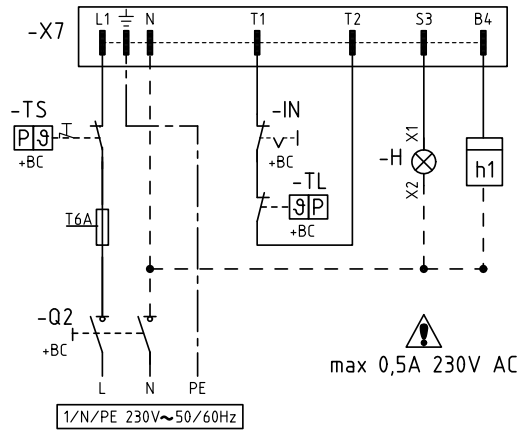

VPS 504 CONTROLLO TENUTA VALVOLE GAS - VPS 504 GAS LEAKAGE DETECTOR
VPS 504 CONTROLE D' ETANCHEITE GAZ - VPS 504 DICHTHEITSKONTROLLE

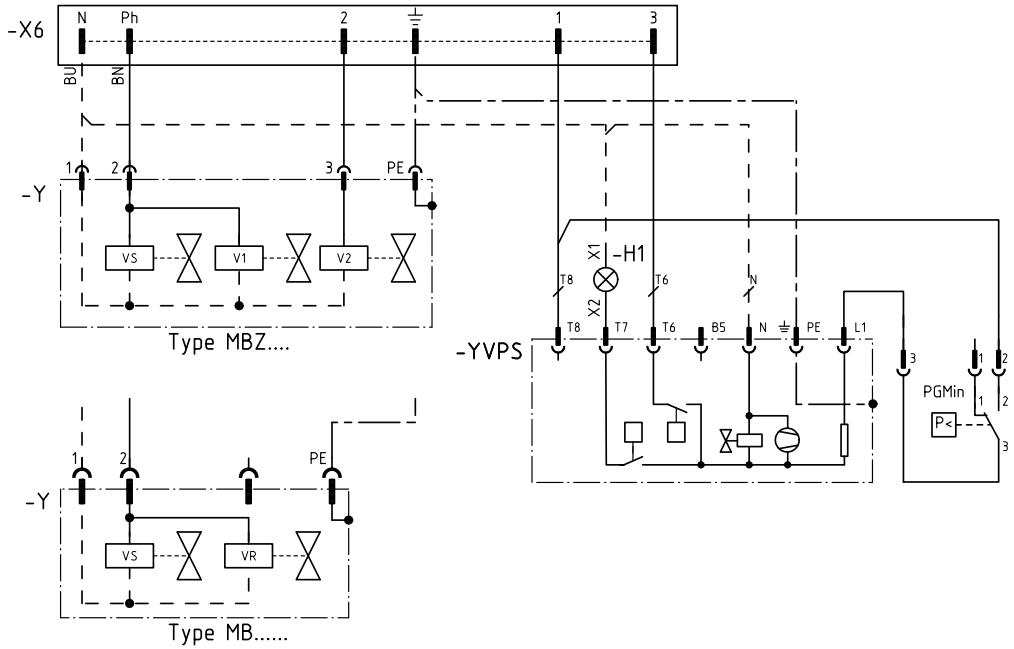

KITS

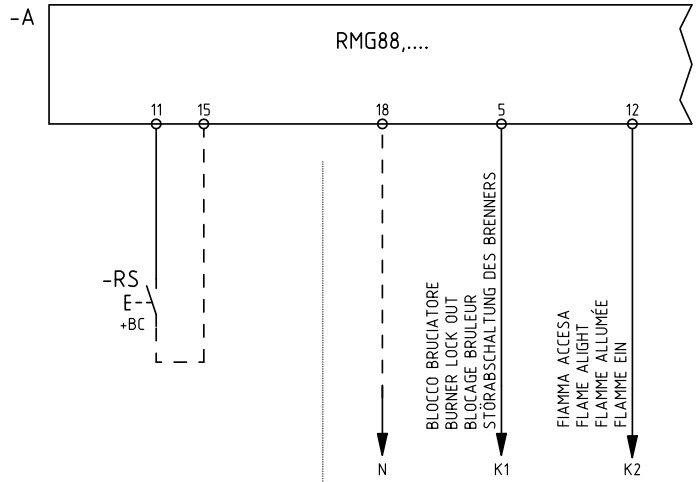

PULSANTE DI SBLOCCO A DISTANZA
REMOTE RESET BUTTON
BOUTON DE DEPLOCAGE A DISTANCE
FERNETSTORUNGSTASTE

USCITA PER KIT RELE' CONTATTI PULITI
OUTPUT FOR VOLTAGE FREE CONTACTS KIT
SORTIE POUR KIT RELAIS CONTACTS PROPRES
AUSGANG FÜR REINKONTAKTE-KIT

max 10A AC1 230V AC
max 2A AC15 230V AC

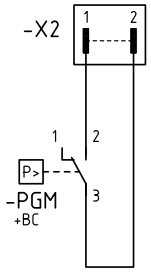

PRESSOSTATO GAS DI MASSIMA
MAXIMUN GAS PRESSURE SWITCH
PRESSOSTAT GAZ MAXI
HÖCHSTGASDRUCKWÄCHTER

RS 34-44/1 MZ

BU = BLU / BLUE / BLEU / BLAU	YE = GIALLO / YELLOW / JAUNE / GELB	WH = BIANCO / WHITE / BLANC / WEISS	GY= GRIGIO / GREY / GRIS / GRAU	TQ= TURCHESE / TURQUOISE / TURQUOISE / TURKISBLAU
BK = NERO / BLACK / NOIR / SCHWARZ	GN = VERDE / GREEN / VERT / GRÜN	OG= ARANCIO / ORANGE / ORANGE / ORANGE	PK= ROSA / PINK / ROSE / ROSA	SR= ARGENTO / SILVER / ARGENT / SILBER
BN = MARRONE / BROWN / MARRON / BRAUN	RD = ROSSO / RED / ROUGE / ROT	VT= VIOLETTO / VIOLET / VIOLET / VIOLETT	GD= ORO / GOLD / OR / GOLD	GNYE= GIALLO/VERDE / YELLOW/GREEN / JAUNE/VERT / GELB/GRUN

COLLEGAMENTI ELETTRICI A CURA DELL' INSTALLATORE ELECTRICAL CONNECTIONS SET BY INSTALLER ELEKTROANSCHLÜSSE VOM INSTALLATEUR AUSZUFÜHREN RACCORDEMENTS ÉLECTRIQUE EFFECTUÉ PAR L' INSTALLATEUR

Sheet : 4

KEY TO ELECTRICAL LAYOUT

A	–	Electrical control box
B	–	Radio noise filter
+BB	–	Components on burners
+BC	–	Components on boiler
C1	–	Capacitor
CN1	–	Ionisation probe connector
H	–	Remote lockout signalling
H1	–	Lockout YVPS
IN	–	Manual burner stop switch
ION	–	Ionisation probe
h1	–	Hour counter
K1	–	Relay
MV	–	Fan motor
PA	–	Air pressure switch
PGM	–	Maximum gas pressure switch
PGMin	–	Low gas pressure switch
Q2	–	Single–phase knife switch
RS	–	Remote reset button
TA	–	Ignition transformer
TL	–	Limit thermostat/pressure switch
TS	–	Safety thermostat/pressure switch
Y	–	Gas regulation valve + gas safety valve
YVPS	–	Gas valve leak detection control device
XP2	–	Maximum gas pressure switch connector
XP6	–	6-pole socket
XP7	–	7-pole socket
XTB	–	Shelf earth
X2	–	2-pin plug
X6	–	6-pin plug
X7	–	7-pin plug

电气图图例说明

A	–	控制盒
B	–	抗电磁干扰的滤波器
+BB	–	燃烧器上的零件
+BC	–	锅炉上的零件
C1	–	电容
CN1	–	离子探针接头
H	–	远程锁定信号
H1	–	锁定 YVPS
IN	–	燃烧器手动停机开关
ION	–	电离子探针
h1	–	计时器
K1	–	继电器
MV	–	风机电机
PA	–	风压开关
PGM	–	最大燃气压力开关
PGMin	–	最低燃气压力开关
Q2	–	单相刀闸开关
RS	–	远程复位按钮
TA	–	点火变压器
TL	–	温度 / 压力限制开关
TS	–	温度 / 压力安全开关
Y	–	燃气调节阀 + 燃气安全阀
YVPS	–	燃气泄漏检测装置
XP2	–	最大燃气压力开关接头
XP6	–	6- 孔插座
XP7	–	7- 孔插座
XTB	–	接地
X2	–	2- 针插头
X6	–	6- 针插头
X7	–	7- 针插头

Registered Office - 公司注册所在地 :
RIELLO S.p.A.
I-37045 Legnago (VR)
Tel.: +39.0442.630111
http:// www.riello.it
http:// www.rielloburners.com

Manufacturing site:
Riello Heating Equipment (Shanghai) CO., LTD
No. 388, Jinbai Road - Jinshan Industrial Zone
201506 - Shanghai
CHINA

生产场所 :
Riello Heating Equipment (Shanghai) CO., LTD
利雅路热能设备（上海）有限公司
上海市金山工业区金百路 388 号